CURSO: DISEÑO DE RECIPIENTES SOMETIDOS A PRESION SEGUN LA NORMA ASME SECT VIII, DIV. 1

CURSO: "DISEÑO DE RECIPIENTES SOMETIDOS A PRESION SEGUN LA NORMA ASME SCT. VIII. DIV. 1"

OBJETIVO GENERAL - SECCION - DISEÑO

DADAS LAS ESPECIFICACIONES DE DISEÑOS, EL PARTICIPANTE ESTARA EN CAPACIDAD DE REALIZAR O ELABORAR DISEÑOS MECANICOS DE RECIPIENTES SOMETIDOS A PRESION BAJO LA NORMA ASME, SECT. VIII, DIV. 1. CON UN MARGEN DE ERROR NO MAYOR AL 10% Y EN UN TIEMPO COMPETITIVO DE 16 HORAS.

CLASIFICACION	SOBRE TIERRA				BAJO TIERRA
TIPOS → / PRODUCTO \ PRESION	Atmosférico (Nota 3)	Baja Presión 0 a 2.5 Psia.	Media Presión 2.5 a 15 Psia.	Alta Presión Mayor 15 Psia	Cavernas
Crudo	●	●	●	NA ~3000 Psia	●
Condensados	●	●	●	●	●
Aceites	●	●	NA	NA	●
Gasolina Natural	●	●	●	NA	●
Butano	NA	●Refrigerado	●Refrigerado	●	●
Propano	NA	●Refrigerado	●Refrigerado	●	●
Gas sin Tratar	NA	●Refrigerado	●Refrigerado	●	●
Ethano	NA	●Refrigerado	●Refrigerado	●	●
Petroquímicos	NA	●Refrigerado	●Refrigerado	●	●
Gas Natural	NA	NA	NA	●	●
GLN	NA	●	●Refrigerado	●	NA
Químicos para tratamiento Fluidos	●	●	NA	NA	NA
Deshidratantes Químicos	●	●	NA	NA	NA
Especiales Materiales	●	●	●	NA	NA
Sólidos	●	NA	NA	NA	NA
Agua	●	NA	NA	NA	NA
Código Aplicable	API 650 (Nota 1)	API 620/650 (Nota 1)	API 620	ASME SEC VIII	No disponible

● APLICABLE NA: NO APLICABLE

Notas:

1. INTRODUCCIÓN

LA SOCIEDAD AMERICANA DE INGENIEROS MECÁNICOS (ASME) HA ESTABLECIDOS REGLAS PARA LA CONSTRUCCIÓN DE RECIPIENTES A PRESIÓN Y SUS PARTES.

EL OBJETIVO DE ESTABLECER ESTAS REGLAS ES PERMITIR, CON UN ALTO GRADO DE SEGURIDAD EL DISEÑO, LA FABRICACIÓN E INSPECCIÓN DE RECIPIENTE SOMETIDOS A PRESIÓN, PERMITIENDO CON ELLO UNA LARGA VIDA ÚTIL, ASÍ COMO UN MAYOR MARGEN DE TIEMPO CONTRA EL DETERIORO.

LA CONCEPCIÓN DE CADA UNA DE ESTAS NORMAS SON EL FRUTO DE LA EXPERIENCIA PRACTICA Y EL CONOCIMIENTO TEÓRICO, LO CUAL HA REDUNDADO EN MEJORES DISEÑOS, Y PRUEBA DE ELLO, ES LA ACEPTACIÓN A NIVEL MUNDIAL DEL CÓDIGO ASME COMO HERRAMIENTA EFICAZ PARA LA CONSTRUCCIÓN DE RECIPIENTE A PRESIÓN.

2. CÓDIGOS Y ESPECIFICACIONES DE DISEÑO

2.1 IDENTIFICACIÓN

SECCIÓN	DESCRIPCIÓN
I	Caldera de Potencia
II	Especificaciones de Materiales Parte A. Ferroso Parte B. No Ferroso Parte C. Electrodos
III	Planta de Fuerza Nuclear
IV	Caldera de Calefacción
V	Pruebas no Destructiva
VI	Reglas para Conservación y Operación de Calderas de Calefacción.
VIII	Recipientes a Presión Div. 1 Div. 2/Reglas Alternativa 73000 Psi
IX	Requisito para Calificación de Soldadura.
X	Recipiente a Presión de Plástico Reforzado con Fibra de Vidrio
XI	Regla para la Inspección de Planta de Fuerzas Nucleares.

CÓDIGO ASME / RECIPIENTES A PRESIÓN Y CALDERA

CALDERAS DE POTENCIA; FUE EL PRIMER CÓDIGO DE RECIPIENTES A PRESIÓN Y CALDERA. PREPARADO POR EL COMITE DEL ASME REUNIDO EN 1911. ESTE CÓDIGO ES LA SECCIÓN 1. EL PRIMERO FUE EDITADO EN 1914.

HISTORIA DE LOS CÓDIGOS DE RECIPIENTE A PRESIÓN

- **1928 Código de Recipiente a Presión no expuesto al fuego.**
- **1968 Revisión del Código de Recipiente a Presión.**
- **1968 Sección VIII. Div. 2. Fue desarrollado Reglas alternativas para Recipientes a Presión.**
- **1969 Sección X. Recipientes a Presión de Fibra de Vidrio reforzada con Plástico.**

HISTORIA DE LOS CÓDIGOS DE REFERENCIA

- **1924 Sección II. (Materiales).**
- **1937 Sección IX. Calificación de Soldadura (Pero antes de este tiempo la Sección IX apareció como un Suplemento de la Sección VIII).**

- **ADDENDA DE CÓDIGO**

  - **Son revisiones al código; el cual es un cambio/requerimientos previos. Estos cambio serán mandatorio 6 meses después de editado.**

  - **Esta Revisiones son llamadas Addenda.**

Estas addendas se identifica en el Código como las hojas coloreadas. El incluye revisiones a secciones individuales de el Código. Son publicadas anualmente y será enviada automáticamente al comprador.

- **Las ediciones son editadas cada tres años.**

CONFIGURACIÓN DEL COMITE DEL ASME

El Código ASME son escrito, revisado y interpretado por el Comite de Proceso.

El Comite Principal tiene la palabra final sobre Item traído ante por el Subcomité hay Subcomité por cada Código y Subgrupo y Grupo de Trabajo incluido en cada Subcomité.

CONFIGURACIÓN DEL COMITE DEL ASME

El Código ASME son escrito, revisado y interpretado por el Comite de Proceso.

El Comite Principal tiene la palabra final sobre Item traído ante por el Subcomité hay Subcomité por cada Código y Subgrupo y Grupo de Trabajo incluido en cada Subcomité.

CONFIGURACION DEL COMITE DEL ASME

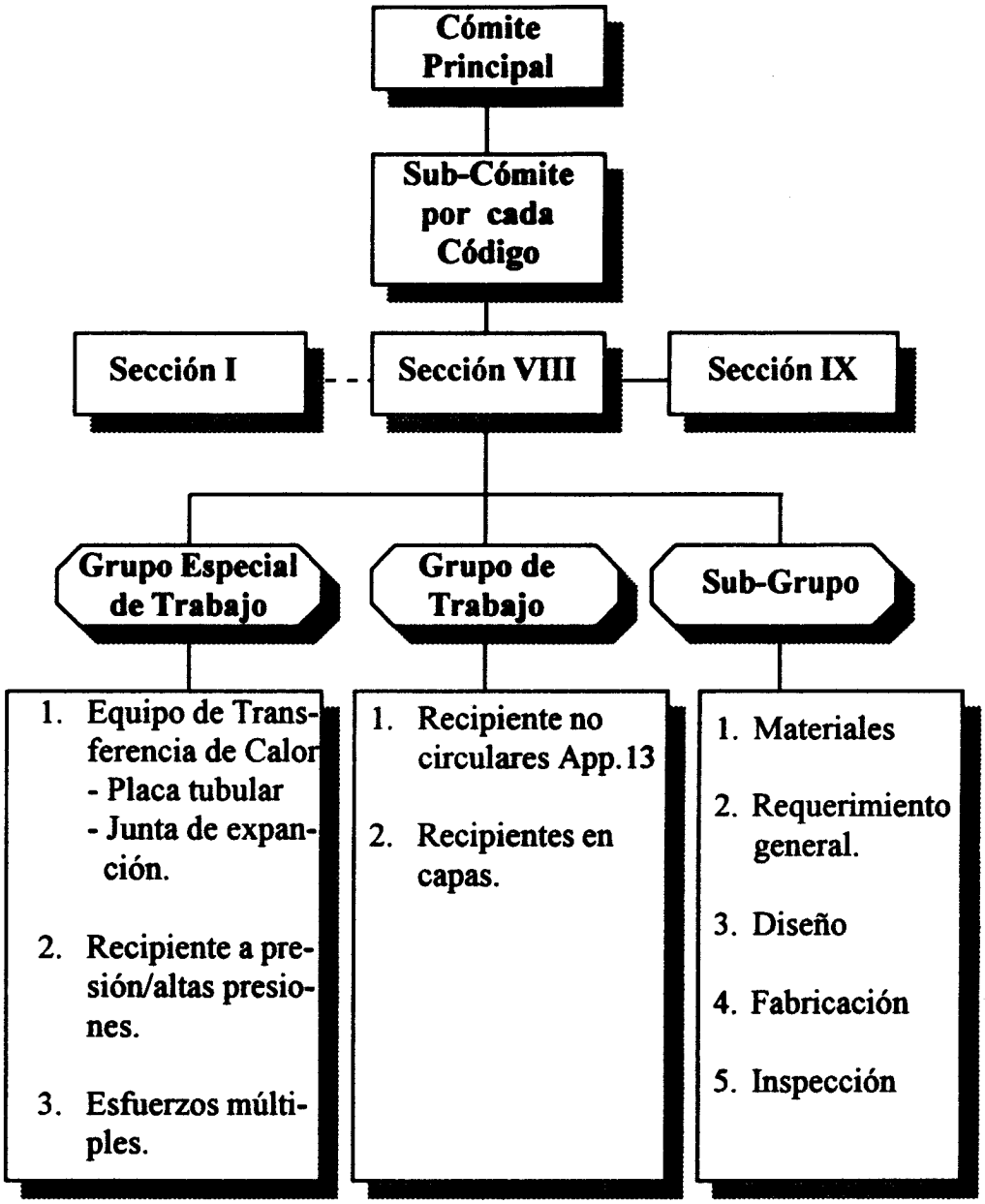

Subgroup on General Requirements (SC VIII)

C. C. Neely, *Chairman*
R. E. Tillberg, *Secretary*
A. P. Ahrendt
W. J. Carter
W. L. Garvin
C. R. Good
S. M. Matthews
P. M. Nightengale
A. S. Olivares
A. M. Smolen
A. J. Spencer
D. A. Staskelunas
E. A. Steen
W. J. Stuber

Subgroup on Materials (SC VIII)

J. W. Tackett, *Chairman*
H. L. Hime, *Secretary*
W. D. Doty
J. Hainsworth
J. D. McLoughlin
E. G. Nisbett
D. W. Rahoi
K. K. Tam
D. A. Wells

Subgroup on Design (SC VIII)

R. F. O'Neill, *Chairman*
R. E. Knoblock, *Secretary*
M. R. Bauman
L. R. Farr
J. A. Hayward
J. L. Jakubowitz
M. H. Jawad
G. G. Karcher
R. W. Mikitka
U. R. Miller
K. Mokhtarian
A. Selz
J. W. Stokes
K. K. Tam
E. L. Thomas, Jr.

Working Group on Noncircular Vessels (SG-D) (SC VIII)

A. Selz, *Chairman*
G. Ganeshan
H. E. Gordon
P. M. Nightengale
R. K. Rothenbucher
K. V. Shipes
A. M. Smolen
B. K. Thakur
E. L. Thomas, Jr.
J. L. Urner
S. V. Voorhees

Subgroup on Fabrication and Inspection (SC VIII)

J. O. Brown, *Chairman*
R. F. O'Neill, *Secretary*
G. Bibel
R. W. Boyce
S. C. Cyr
R. E. Feigel
H. B. France
M. J. Houle
H. Lewis, Jr.
F. O. Parnkopf
H. C. Rauschenplat
R. E. Schuessler
J. J. Szigety
R. F. Wagner

Working Group on Layered Vessels (SGFI) (SC VIII)

F. O. Parnkopf, *Chairman*
A. M. Smolen, *Secretary*
S. M. Caldwell
G. E. Fratcher
J. L. Jacobowitz
H. C. Rauschenplat
M. A. Tracy

SUBCOMMITTEE ON WELDING (SC IX)

B. D. Hackney, *Chairman*
R. K. Sager, *Vice Chairman*
P. D. Stumpf, *Secretary*
B. L. Alia
M. L. Carpenter
H. R. W. Cobb
H. R. Conaway
W. D. Doty
J. G. Feldstein
P. D. Flenner
M. J. Houle
R. A. LaPointe
R. E. Lorentz, Jr.
R. P. Meineke
A. H. Miller
B. R. Newmark
P. P. Norris
S. D. Reynolds, Jr.
B. S. Russell
W. K. Scattergood
I. L. Smith
W. J. Sperko
G. W. Spohn III
D. J. Stull
K. C. Taber
D. L. Tevis
R. R. Young
J. B. Christofferson, Alternate
W. J. Wagner, Alternate

Subgroup on Materials (SC IX)

R. E. Lorentz, Jr., *Chairman*
M. L. Carpenter
H. R. Conaway
M. V. Davis
P. D. Flenner
R. M. Jessee
A. H. Miller
R. K. Sager
C. E. Spaeder
W. J. Sperko
K. C. Taber
J. W. Tackett
R. R. Young

Subgroup on General Requirements (SC IX)

B. R. Newmark, *Chairman*
W. V. Dix
R. M. Jessee
R. P. Meineke
A. S. Olivares
I. L. Smith
W. J. Spencer
K. C. Taber
C. E. Wainwright

Subgroup on Procedure Qualification (SC IX)

M. J. Houle, *Chairman*
B. L. Alia
R. K. Brown, Jr.
H. R. W. Cobb
J. G. Feldstein
A. H. Miller
S. D. Reynolds, Jr.
D. E. Smith
W. J. Sperko

Subgroup on Performance Qualification (SC IX)

M. J. Houle, *Chairman*
D. A. Bowers, Jr.
J. B. Christofferson
P. D. Flenner
R. A. LaPointe
P. P. Norris
W. K. Scattergood
G. W. Spohn III
D. L. Tevis
W. J. Wagner

Subgroup on Brazing (SC IX)

M. L. Carpenter, *Chairman*
R. A. LaPointe
A. H. Miller
J. Serre

SUBCOMMITTEE ON REINFORCED PLASTIC PRESSURE VESSELS (SC X)

D. M. Bertelsman, *Chairman*
J. Yarmush, *Secretary*
D. H. Barton
J. H. Bouchard
L. C. Daniels
T. J. Fowler
S. V. Hoa
L. E. Hunt
W. J. Johns
J. A. Kidd
F. R. Pfliederer
J. A. Rolston
A. I. Snyder
C. H. Walters

PERSONNEL

ASME Boiler and Pressure Vessel Committee

Subcommittees, Subgroups, and Working Groups

As of December 31, 1988

MAIN COMMITTEE

W. R. Mikesell, *Chairman*
R. J. Cepluch, *Vice Chairman*
G. M. Eisenberg, *Secretary*
B. W. Bace
M. D. Bernstein
R. J. Bosnak
M. N. Bressler
D. A. Canonico
L. J. Chockie
H. F. Dobel
W. D. Doty
J. R. Farr
B. D. Hackney
W. C. Ham
H. L. Hime
M. H. Jawad
G. G. Karcher
E. C. Kistner, Jr.
W. G. Knecht
J. R. MacKay
T. J. Mawson
T. G. McCarty
D. J. McDonald
U. R. Miller
C. C. Neely
T. E. Northup
R. F. O'Neill
R. F. Reedy
M. L. Snow, Jr.
J. W. Tackett
R. E. Feigel, *Alternate*

HONORS AND AWARDS COMMITTEE

H. F. Dobel, *Chairman*
G. M. Eisenberg, *Secretary*
J. R. Farr
C. E. Ford
G. E. Fratcher
W. L. Garvin
O. F. Hedden
R. C. Hudson
M. H. Jawad
E. C. Kistner, Jr.
E. G. Nisbett
R. K. Sager, Jr.
J. W. Tackett

EXECUTIVE COMMITTEE (MAIN COMMITTEE)

R. J. Cepluch, *Chairman*
W. R. Mikesell, *Vice Chairman*
G. M. Eisenberg, *Secretary*
R. J. Bosnak
L. J. Chockie
J. R. Farr
C. E. Ford
B. D. Hackney
E. C. Kistner, Jr.
H. A. Manning
D. J. McDonald
R. F. Reedy

HONORARY MEMBERS (MAIN COMMITTEE)

J. D. Andrew, Jr.
R. D. Bonner
P. M. Brister
H. M. Canavan
J. S. Clarke
W. E. Cooper
G. E. Fratcher
R. M. Gibson
R. C. Griffin
W. L. Harding
E. J. Hemzy
E. L. Kemmler
E. M. Kloeblen
J. E. Lattan
J. LeCoff
F. N. Moschini
C. E. Rawlins
W. R. Smith, Sr.
W. E. Somers
D. B. Wesstrom
F. S. G. Williams
L. P. Zick

MARINE CONFERENCE GROUP

J. Tiratto, *Chairman*
C. F. Banks
V. W. Bugg
G. C. Johnson
E. F. Murphy

CONFERENCE COMMITTEE

M. L. Snow, Jr. — Tennessee *(Chairman)*
D. J. McDonald — National Board of Boiler and Pressure Vessel Inspectors *(Secretary)*
D. C. Barnett, Jr. — Florida
D. E. Beaner — Pennsylvania
G. Black — Washington
V. Bogosian — Illinois
E. Brandt — Los Angeles, California
J. E. Brennan — Ohio
W. E. Brown — Kansas
N. B. Burkheimer — Maryland
R. D. Cather — Alaska
A. Colvin, Jr. — Washington, D.C.
R. A. Coomes — Kentucky
Z. C. Corcero — Michigan
J. G. Cvar — Delaware
A. W. Diamond — Newfoundland, Canada
M. H. Diehl, Jr. — Maryland
F. G. Dolen — New Jersey
C. R. Erickson — California
E. Everett — Georgia
J. J. Fowles — New Brunswick, Canada
J. W. Greenawalt, Jr. — Oklahoma
S. L. Hall — North Carolina
V. Harding — Hawaii
J. Hicks — Virginia
C. Hinsor — Oregon
J. D. Hoh — Missouri
W. J. Holmes — Chicago, Illinois
R. M. Johnson — California
A. Justin — Minnesota
V. Kanable — Wisconsin
G. M. Kuetemeyer — Milwaukee, Wisconsin
J. T. Little — Arizona
B. M. Lovelady — Memphis and Shelby County, Tennessee
C. C. Mann — New Orleans, Louisiana
R. J. Mannion — New Hampshire
S. M. Matthews — Texas
I. W. Mault — Manitoba, Canada
H. T. McEwen — Mississippi
A. W. Meiring — Indiana
E. E. Morgan — Colorado
J. W. Morvant — Louisiana
R. F. Mullaney — Vancouver, Canada
D. Newquist — Nebraska
R. D. O'Connor — Connecticut
H. Parker, Jr. — Nevada
J. C. Parsell — Utah
R. D. Reetz — North Dakota
R. Sauve — Quebec, Canada
M. Shuff — West Virginia
J. L. Smith — Alberta, Canada
R. P. Sullivan — Maine
N. Surtees — Saskatchewan, Canada
C. W. Thompson — Arkansas
M. W. A. West — Prince Edward Island, Canada
R. B. West — Iowa
M. J. Wheel — Vermont
R. K. White — New York
T. F. Wickham — Rhode Island
H. J. Wright — Ontario, Canada
R. A. Yeo — Nova Scotia, Canada

2.2 CLASIFICACIÓN

Códigos de Fabricación

. Sección I.	Calderas de Potencia
. Sección III.	Planta Fuerza Nucleares
. Sección IV.	Caldera de Calefacción
. Sección VIII.Div.1/Div.2	Recipiente de Presión
. Sección X. (Div.1/Div.2)	Recipiente de Fibra de Vidrio

Códigos de Referencia

. Sección II.	Materiales
. Sección V.	Ensayos no Destructivos
. Sección IX.	Requisito para Calificación de Soldadura.

U-3. Standars Consultados por Sección VIII Div. 1.

- Esta Sección hace referencia a varios Standards tales como Standards ANSI el cual cubre rating (Presión-Temperatura).

- Estos Standards con los años de Edición están listado en la Tabla U-3.

TABLE U-3
YEAR OF ACCEPTABLE EDITION OF REFERENCED STANDARDS IN THIS DIVISION

	Title	Number	Year
	Unified Screw Threads	ANSI B1.1	1974
	Pipe Threads	ANSI B2.1	1968
	Cast Iron Pipe Flanges and Flanged Fittings, Class 25, 125, 250 and 800	ANSI B16.1	1975
	Steel Pipe Flanges and Flanged Fittings	ANSI B16.5	1981(1)
	Factory-Made Wrought Steel Buttwelding Fittings	ANSI B16.9	1978
	Forged Steel Fittings, Socket-Welding and Threaded	ANSI B16.11	1980
	Cast Bronze Threaded Fittings Class 125 and 250	ANSI B16.15	1978
	Ring-Joint Gaskets and Grooves for Steel Pipe Flanges	ANSI B16.20	1973
	Bronze Pipe Flanges and Flanged Fittings, Class 150 and 300	ANSI B16.24	1979
	Wrought Steel Buttwelding Short Radius Elbows and Returns	ANSI B16.28	1978
	Square and Hex Nuts	ANSI B18.2.2	1972
	Welded and Seamless Wrought Steel Pipe	ANSI B36.10	1979
	Ductile Iron Pipe Flanges and Flanged Fittings, Class 150 and 300	ANSI B16.42	1979
	Large Diameter Carbon Steel Flanges	ANSI/API Std. 605 3rd Ed.	1980
A87	Safety and Relief Valves	ANSI/ASME PTC 25.3	1976(2)
	Piping Fittings of Wrought Carbon Steel	ASTM A 234	1982
	Standard Test Methods for Flash Point by Tag Closed Tester	ASTM D 56	1982
	Standard Test Methods for Flash Point by Pensky-Martens Closed Tester	ASTM D 93	1980
	Marking and Labeling Systems	UL-969	1980

A87 NOTES:
(1) See UG-11(a)(2).
(2) Including the 1977 Addenda.

TABLE UW-12
MAXIMUM ALLOWABLE JOINT EFFICIENCIES[1,5] FOR ARC AND GAS WELDED JOINTS

Type No.	Joint Description	Limitations	Joint Category	Degree of Radiographic Examination		
				(a) Full[2]	(b) Spot[3]	(c) None
(1)	Butt joints as attained by double-welding or by other means which will obtain the same quality of deposited weld metal on the inside and outside weld surfaces to agree with the requirements of UW-35. Welds using metal backing strips which remain in place are excluded.	None	A, B, C, & D	1.00	0.85	0.70
(2)	Single-welded butt joint with backing strip other than those included under (1)	*(a)* None except as in (b) below	A, B, C, & D	0.90	0.80	0.65
		(b) Circumferential butt joints with one plate offset; see UW-13(c) and Fig. UW-13.1, sketch (k)	A, B, & C	0.90	0.80	0.65
(3)	Single-welded butt joint without use of backing strip	Circumferential butt joints only, not over $\frac{5}{8}$ in. thick and not over 24 in. outside diameter	A, B, & C	NA	NA	0.60
(4)	Double full fillet lap joint	*(a)* Longitudinal joints not over $\frac{1}{4}$ in. thick	A	NA	NA	0.55
		(b) Circumferential joints not over $\frac{5}{8}$ in. thick	B & C	NA	NA	0.55
(5)	Single full fillet lap joints with plug welds conforming to UW-17	*(a)* Circumferential joints[4] for attachment of heads not over 24 in. outside diameter to shells not over $\frac{1}{2}$ in. thick	B	NA	NA	0.50
		(b) Circumferential joints for the attachment to shells of jackets not over $\frac{5}{8}$ in. in nominal thickness where the distance from the center of the plug weld to the edge of the plate is not less than $1\frac{1}{2}$ times the diameter of the hole for the plug.	C	NA	NA	0.50

(6)	Single full fillet lap joints without plug welds	*(a)* For the attachment of heads convex to pressure to shells not over $\frac{5}{8}$ in. required thickness, only with use of fillet weld on inside of shell; or	A & B	NA	NA	0.45
		(b) for attachment of heads having pressure on either side, to shells not over 24 in. inside diameter and not over $\frac{1}{4}$ in. required thickness with fillet weld on outside of head flange only	A & B	NA	NA	0.45

NOTES:
(1) The single factor shown for each combination of joint category and degree of radiographic examination replaces both the stress reduction factor and the joint efficiency factor considerations previously used in this Division.
(2) See UW-12(a) and UW-51.
(3) See UW-12(b) and UW-52.
(4) Joints attaching hemispherical heads to shells are excluded.
(5) $E = 1.0$ for butt joints in compression.

critical sections are exposed for examination for the full wall thickness; as in tubesheets drilled with holes spaced no farther apart than the wall thickness of the casting. The examination afforded may be taken in lieu of destructive or radiographic testing required in (2)(b).

(5) For carbon, low alloy, or high alloy steels, higher quality factors may be applied if in addition to the minimum requirements of UG-24 (a)(1), additional examinations are made as follows.

(a) For centrifugal castings, a factor not to exceed 90% may be applied if the castings are examined by the magnetic particle or liquid penetrant methods in accordance with the requirements of Appendix 7.

(b) For static and centrifugal castings a factor not to exceed 100% may be applied if the castings are examined in accordance with all of the requirements of Appendix 7.

(6) The following additional requirements apply when castings (including those permitted in UG-11) are to be used in vessels to contain lethal substances (UW-2).

(a) Castings of cast iron (UCI-2) and cast ductile iron (UCD-2) are prohibited.

A86 *(b)* Each casting of nonferrous material permitted by this Division shall be radiographed at all critical sections (see footnote 1, Appendix 7) without revealing any defects. The quality factor for nonferrous castings for lethal service shall not exceed 90%.

(c) Each casting of steel material permitted by this Division shall be examined per Appendix 7 for severe service applications [7-3(b)]. The quality factor for lethal service shall not exceed 100%.

A86 *(b) Defects.* Imperfections defined as unacceptable by either the material specification or by Appendix 7, 7-3, whichever is more restrictive, are considered to be defects and shall be the basis for rejection of the casting. Where defects have been repaired by welding, the completed repair shall be subject to reexamination and, when required by either the rules of this Division or the requirements of the castings specification, the repaired casting shall be postweld heat treated and, to obtain a 90% or 100% quality factor, the repaired casting shall be stress relieved.

(c) Identification and Marking. Castings to which a quality factor of 90% or 100% is to be applied shall be marked with the manufacturer's and materials identification marking and, in addition, the quality factor shall be clearly stamped on the casting.

UG-25 CORROSION

(a) The user or his designated agent (see U-2) shall specify corrosion allowances other than those required by the rules of this Division. Where corrosion allowances are not provided, this fact shall be indicated on the Data Report.

(b) Vessels or parts of vessels subject to thinning by corrosion, erosion, or mechanical abrasion shall have provision made for the desired life of the vessel by a suitable increase in the thickness of the material over that determined by the design formulas, or by using some other suitable method of protection. (See Appendix E.)

NOTE: When using high alloys and nonferrous materials either for solid wall or clad or lined vessels, refer to UHA-6, UCL-3, and UNF-4, as appropriate

(c) Material added for these purposes need not be of the same thickness for all parts of the vessel if different rates of attack are expected for the various parts.

(d) Except as required in UCS-25, no additional thickness need be provided when previous experience in like service has shown that corrosion does not occur or is of only a superficial nature.

(e) Telltale Holes. Telltale holes may be used to provide some positive indication when the thickness has been reduced to a dangerous degree. Telltale holes shall not be used in vessels which are to contain lethal substances [see UW-2(a)], except as permitted by ULW-76 for vent holes in layered construction. When telltale holes are provided, they shall have a diameter of $\frac{1}{16}$ in. to $\frac{3}{16}$ in. and have a depth not less than 80% of the thickness required for a seamless shell of like dimensions. These holes shall be provided in the opposite surface to that where deterioration is expected. [For telltale holes in clad or lined vessels, see UCL-25(b).]

(f) Openings for Drain. Vessels subject to corrosion shall be supplied with a suitable drain opening at the lowest point practicable in the vessel; or a pipe may be used extending inward from any other location to within $\frac{1}{4}$ in. of the lowest point.

UG-26 LININGS

Corrosion resistant or abrasion resistant linings, whether or not attached to the wall of a vessel, shall not be considered as contributing to the strength of the wall except as permitted in Part UCL (see Appendix F).

(1) Category A. Longitudinal welded joints within the main shell, communicating chambers,[2] transitions in diameter, or nozzles; any welded joint within a sphere, within a formed or flat head, or within the side plates[3] of a flat-sided vessel; circumferential welded joints connecting hemispherical heads to main shells, to transitions in diameters, to nozzles, or to communicating chambers.[2]

(2) Category B. Circumferential welded joints within the main shell, communicating chambers,[2] nozzles, or transitions in diameter including joints between the transition and a cylinder at either the large or small end; circumferential welded joints connecting formed heads other than hemispherical to main shells, to transitions in diameter, to nozzles, or to communicating chambers.[2]

(3) Category C. Welded joints connecting flanges, Van Stone laps, tubesheets, or flat heads to main shell, to formed heads, to transitions in diameter, to nozzles, or to communicating chambers;[2] any welded joint connecting one side plate[3] to another side plate of a flat-sided vessel.

(4) Category D. Welded joints connecting communicating chambers[2] or nozzles to main shells, to spheres, to transitions in diameter, to heads, or to flat-sided vessels, and those joints connecting nozzles to communicating chambers[2] (for nozzles at the small end of a transition in diameter, see Category B).

(b) When butt welded joints are required elsewhere in this Division for Category B, an angle joint connecting a transition in diameter to a cylinder shall be considered as meeting this requirement provided the angle α (see Fig. UW-3) does not exceed 30 deg. All requirements pertaining to the butt welded joint shall apply to the angle joint.

MATERIALS

UW-5 GENERAL

(a) Pressure Parts. Materials used in the construction of welded pressure vessels shall comply with the requirements for materials given in UG-4 through UG-15, and shall be proven of weldable quality. Satisfactory qualification of the welding procedure under Section IX is considered as proof.

(b) Nonpressure Parts. Materials used for nonpressure parts which are welded to the pressure vessel shall be proven of weldable quality as described below.

(1) For material identified in accordance with UG-10, UG-11, UG-15, or UG-93, satisfactory qualification of the welding procedure under Section IX is considered as proof of weldable quality.

(2) For materials not identifiable in accordance with UG-10, UG-11, UG-15, or UG-93, but identifiable as to nominal chemical analysis and mechanical properties or to a material specification not permitted in this Division, satisfactory qualification of the welding procedure under Section IX is considered as proof of weldable quality. The welding procedure need only be qualified once for a given nominal chemical analysis and mechanical properties or material specification not permitted in this Division.

(3) Material which cannot be identified may be proved to be of weldable quality by preparing a butt-joint test coupon from each piece of nonidentified material to be used. Guided bend test specimens made from the test coupon shall pass the tests specified in QW-451 of Section IX.

(c) Two materials of different specifications may be joined by welding provided the requirements of Section IX, QW-250, are met.

(d) Materials joined by electroslag welding shall be limited to ferritic steels and the following austenitic steels which are welded to produce a ferrite containing weld metal: SA-240 Types 304, 304L, 316, and 316L; SA-182 F304, F304L, F316, and F316L; SA-351 CF3, CF3A, CF3M, CF8, CF8A, and CF8M.

(e) Materials joined by the inertia and continuous drive friction welding processes shall be limited to materials assigned P-Numbers in Section IX and shall not include rimmed or semikilled steel.

DESIGN

UW-8 GENERAL

The rules in the following paragraphs apply specifically to the design of pressure vessels and vessel parts that are fabricated by welding and shall be used in conjunction with the general requirements for *Design* in Subsection A, and with the specific requirements for *Design* in Subsection C that pertain to the class of material used.

UW-9 DESIGN OF WELDED JOINTS

(a) Permissible Types. The types of welded joints permitted in arc and gas welding processes are listed

[2] *Communicating chambers* are defined as appurtenances to the vessel which intersect the shell or heads of a vessel and form an integral part of the pressure containing enclosure, e.g., sumps.

[3] *Side plates of a flat-sided vessel* are defined as any of the flat plates forming an integral part of the pressure containing enclosure.

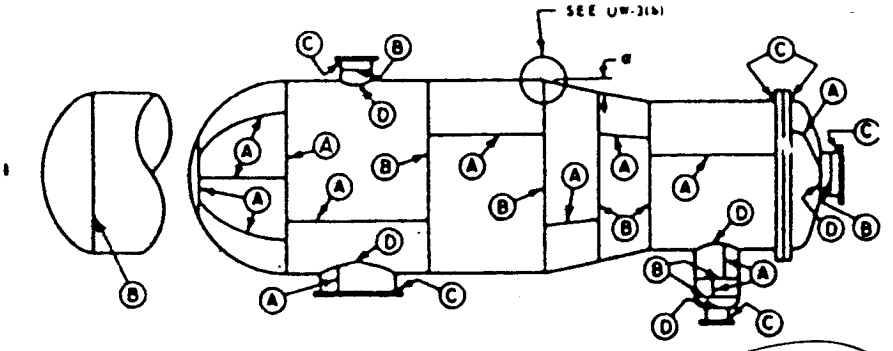

FIG. UW-3 ILLUSTRATION OF WELDED JOINT LOCATIONS TYPICAL OF CATEGORIES A, B, C, AND D

by Part UHA, the joints of various categories (see UW-3) shall be as follows.

(1) All joints of Category A shall be Type No. (1) of Table UW-12 except that for Type 304 austenitic chromium–nickel stainless steels which satisfy the requirements of UHA-51(b)(5), Type No. (2) joints may be used.

(2) All joints of Category B shall be Type No. (1) or No. (2) of Table UW-12.

(3) All joints of Category C shall be full penetration welds extending through the entire section at the joint.

(4) All joints of Category D shall be full penetration welds extending through the entire thickness of the vessel wall or nozzle wall.

(c) Unfired steam boilers with design pressures exceeding 50 psi shall have all joints of Category A (see UW-3) in accordance with Type No. (1) of Table UW-12 and all joints in Category B in accordance with Type No. (1) or No. (2) of Table UW-12. All butt welded joints shall be fully radiographed except under the provisions of UW-11(a)(4). When fabricated of carbon or low-alloy steel, such vessels shall be postweld heat treated. See also U-1(g), UG-16(b), and UCS-25.

(d) Pressure vessels or parts subject to direct firing [see U-1(h)] may be constructed in accordance with all applicable rules of this Division and shall meet the following requirements.

(1) All welded joints in Category A (see UW-3) shall be in accordance with Type No. (1) of Table UW-12, and all welded joints in Category B, when the thickness exceeds $\frac{5}{8}$ in., shall be in accordance with Type No. (1) or No. (2) of Table UW-12. No welded joints of Type No. (3) of Table UW-12 are permitted for either Category A or B joints in any thickness.

(2) When the thickness at welded joints exceeds $\frac{5}{8}$ in. for carbon (P-No. 1) steels and for all thicknesses for low alloy steels (other than P-No. 1 steels), postweld heat treatment is required. For all other material and in any thickness, the requirements for postweld heat treatment shall be in conformance with the applicable Subsections of this Division. See also U-1(g), UG-16(b), UCS-25 and UCS-56.

(3) The user, his agent, or the manufacturer of the vessel shall make available to the Inspector the calculations used to determine the design temperature of the vessel. The provisions of UG-20 shall apply except that pressure parts in vessel areas having joints other than Type No. (1) and parts in vessel areas having joints other than Type Nos. (1) and (2) of Table UW-12, subject to direct radiation and/or the products of combustion shall be designed for temperatures not less than the maximum surface metal temperatures expected under operating conditions.

UW-3 WELDED JOINT CATEGORY

(a) The term "Category" as used herein defines the location of a joint in a vessel, but not the type of joint. The "Categories" established by this paragraph are for use elsewhere in this Division in specifying special requirements regarding joint type and degree of inspection for certain welded pressure joints. Since these special requirements, which are based on service, material, and thickness, do not apply to every welded joint, only those joints to which special requirements apply are included in the categories. The special requirements will apply to joints of a given category only when specifically so stated. The joints included in each category are designated as joints of Categories A, B, C, and D below. Figure UW-3 illustrates typical joint locations included in each category.

PART UW
REQUIREMENTS FOR PRESSURE VESSELS FABRICATED BY WELDING

GENERAL

UW-1 SCOPE

The rules in Part UW are applicable to pressure vessels and vessel parts that are fabricated by welding and shall be used in conjunction with the general requirements in Subsection A, and with the specific requirements in Subsection C that pertain to the class of material used.

UW-2 SERVICE RESTRICTIONS

(a) When vessels are to contain lethal[1] substances, either liquid or gaseous, all butt welded joints shall be fully radiographed, except under the provisions of UW-2(a)(2) and UW-2(a)(3) below, and UW-11(a)(4). When fabricated of carbon or low alloy steel, such vessels shall be postweld heat treated. When a vessel is to contain fluids of such a nature that a very small amount mixed or unmixed with air is dangerous to life when inhaled, it shall be the responsibility of the user and/or his designated agent to determine if it is lethal. If determined as lethal, the user and/or his designated agent [see U-2(a)] shall so advise the designer and/or Manufacturer. It shall be the responsibility of the Manufacturer to comply with the applicable Code provisions (see UCI-2 and UCD-2).

(1) The joints of various categories (see UW-3) shall be as follows.

(a) Except under the provisions of (a)(2) or (a)(3) below, all joints of Category A shall be Type No. (1) of Table UW-12.

(b) All joints of Categories B and C shall be Type No. (1) or No. (2) of Table UW-12.

(c) All joints of Category D shall be full penetration welds extending through the entire thickness of the vessel wall or nozzle wall.

(2) Radiographic examination of the welded seam in exchanger tubes and pipes, to a material specification permitted by this Division, which are butt welded without the addition of filler metal may be waived, provided the tube or pipe is totally enclosed within a shell of a vessel which meets the requirements of UW-2(a). In the case of an exchanger, the shell and channel sides must be constructed to the rules for lethal vessels.

(3) If only one side of a heat exchanger contains a lethal substance, the other side need not be built to the rules for a vessel in lethal service if:

(a) exchanger tubes are seamless; or

(b) exchanger tubes conform to a tube specification permitted by this Division, are butt welded without addition of filler metal, and receive in lieu of full radiography all of the following nondestructive testing and examination:

(1) hydrotest in accordance with the applicable specification;

(2) pneumatic test under water in accordance with the applicable material specification, or if not specified, in accordance with SA-688;

(3) ultrasonic or nondestructive electric examination of sufficient sensitivity to detect surface calibration notches in any direction in accordance with SA-557, S1 or S3.

No improvement in longitudinal joint efficiency is permitted because of the additional nondestructive tests.

(b) When vessels are to operate below certain temperatures designated by Part UCS (see UCS-68), or impact tests of the material or weld metal are required

[1] By "lethal substances" are meant poisonous gases or liquids of such a nature that a very small amount of the gas or of the vapor of the liquid mixed or unmixed with air is dangerous to life when inhaled. For purposes of this Division, this class includes substances of this nature which are stored under pressure or may generate a pressure if stored in a closed vessel.

TABLES

UCS-23	Maximum Allowable Stress Values in Tension for Carbon and Low Alloy Steel	268
UNF-23.1	Maximum Allowable Stress Values in Tension for Nonferrous Metals — Aluminum and Aluminum Alloy Products	292
UNF-23.2	Maximum Allowable Stress Values in Tension for Nonferrous Metals — Copper and Copper Alloys	304
UNF-23.3	Maximum Allowable Stress Values in Tension for Nonferrous Metals — Nickel and High Nickel Alloys	328
UNF-23.4	Maximum Allowable Stress Values in Tension for Nonferrous Metals — Titanium and Titanium Alloys	374
UNF-23.5	Maximum Allowable Stress Values in Tension for Nonferrous Metals — Zirconium	376
UHA-23	Maximum Allowable Stress Values in Tension for High Alloy Steel	378
UHT-23	Maximum Allowable Stress Values in Tension for Ferritic Steels With Properties Enhanced by Heat Treatment	458

shall be designed and constructed to withstand the most severe condition of coincident pressure and temperature expected in normal service. Only the parts of chambers which come within the scope of this Division, U-1, need be constructed in compliance with its provisions.

(b) Special Shapes. Vessels other than cylindrical and spherical and those for which no design rules are provided in this Division may be designed under the conditions set forth in U-2.

(c) When no design rules are given and the strength of a pressure vessel or vessel part cannot be calculated with a satisfactory assurance of accuracy, the maximum allowable working pressure of the completed vessel shall be established in accordance with the provisions of UG-101.

A87 UG-20 DESIGN TEMPERATURE

(a) Maximum. Except as required in UW-2(d)(3), the maximum temperature used in design shall be not less than the mean metal temperature (through the thickness) expected under operating conditions for the part considered [see 3-1(g)]. If necessary, the metal temperature shall be determined by computation or by measurement from equipment in service under equivalent operating conditions.

(b) Minimum. The minimum metal temperature used in design shall be the lowest expected in service except when lower temperatures are permitted by the rules of this Division (see UCS-66). The minimum mean metal temperature shall be determined by the principles described in (a) above. Consideration shall include the lowest operating temperature, operational upsets, autorefrigeration, atmospheric temperature, and any other sources of cooling [except as permitted in (f)(3) below].

(c) Design temperatures listed in excess of the maximum temperatures listed in the tables of Subsection C are not permitted. In addition, design temperatures for vessels under external pressure shall not exceed the maximum temperatures given on the external pressure charts.

(d) The design of zones with different metal temperatures may be based on their determined temperatures.

(e) Suggested methods for obtaining the operating temperature of vessel walls in service are given in Appendix C.

(f) Impact testing per UG-84 is not mandatory for pressure vessels which satisfy all of the following.

(1) Nominal thickness is equal to or less than 1 in., and materials are limited to P-No. 1 Gr. No. 1 or 2.

(2) The completed vessel shall be hydrostatically tested per UG-99(b).

(3) Design temperature is no warmer than 650°F nor colder than −20°F. Occasional operating temperatures colder than −20°F are acceptable when due to lower seasonal atmospheric temperature.

(4) The thermal or mechanical shock loadings are not a controlling design requirement. (See UG-22.)

(5) Cyclical loading is not a controlling design requirement. (See UG-22.)

UG-21 DESIGN PRESSURE[a]

Vessels covered by this Division of Section VIII shall be designed for at least the most severe condition of coincident pressure and temperature expected in normal operation. For this condition the maximum difference in pressure between the inside and outside of a vessel, or between any two chambers of a combination unit, shall be considered [see UG-98 and 3-1(b)].

UG-22 LOADINGS

The loadings to be considered in designing a vessel shall include those from:

(a) internal or external design pressure (as defined in UG-21);

(b) weight of the vessel and normal contents under operating or test conditions (This includes additional pressure due to static head of liquids.);

(c) superimposed static reactions from weight of attached equipment, such as motors, machinery, other vessels, piping, linings, and insulation;

(d) the attachment of:

(1) internals (see Appendix D);

(2) vessel supports, such as lugs, rings, skirts, saddles, and legs (see Appendix G);

(e) cyclic and dynamic reactions due to pressure or thermal variations, or from equipment mounted on a vessel, and mechanical loadings;

(f) wind, snow, and seismic reactions, where required;

(g) impact reactions such as those due to fluid shock;

(h) temperature gradients and differential thermal expansion

[a] It is recommended that a suitable margin be provided above the pressure at which the vessel will be normally operated to allow for probable pressure surges in the vessel up to the setting of the pressure relieving devices (see UG-134).

TABLE UG-23.1
MAXIMUM METAL TEMPERATURE FOR WHICH FACTOR OF 1.2 IS APPLICABLE

Table in Which Material is Listed	Temp., °F
UCS-23	700
UNF-23.1	300
UNF-23.2	150
UNF-23.3	900
UNF-23.4	600
UNF-23.5	600
UHA-23	800
UHT-23	700

UG-23 MAXIMUM ALLOWABLE STRESS VALUES[9]

(a) The maximum allowable stress value is the maximum unit stress permitted in a given material used in a vessel constructed under these rules. The maximum allowable tensile stress values permitted for different materials are given in the following tables, which are included in Subsection C.

Table UCS-23 Maximum Allowable Stress Values in Tension for Carbon and Low Alloy Steel

Table UNF-23 Maximum Allowable Stress Values in Tension for Nonferrous Metals

Table UHA-23 Maximum Allowable Stress Values in Tension for High Alloy Steel

Table UCI-23 Maximum Allowable Stress Values in Tension for Cast Iron

Table UCD-23 Maximum Allowable Stress Values in Tension for Cast Ductile Iron

Table UHT-23 Maximum Allowable Stress Values in Tension for Ferritic Steels with Properties Enhanced by Heat Treatment

Table ULT-23 Maximum Allowable Stress Values in Tension for 5%, 8%, and 9% Nickel Steels and 5083-0 Aluminum Alloy at Cryogenic Temperatures for Welded and Nonwelded Construction

(b) The maximum allowable longitudinal compressive stress to be used in the design of cylindrical shells or tubes, either seamless or butt welded, subjected to loadings that produce longitudinal compression in the shell or tube shall be the smaller of the following values:

(1) the maximum allowable tensile stress value permitted in (a);

(2) the value of the factor B determined by the following procedure where A86 A87

t = the minimum required thickness of the cylindrical shell or tube, in.

R_o = outside radius of cylindrical shell or tube, in.

E = modulus of elasticity of material at design temperature, psi. The modulus of elasticity to be used shall be taken from the applicable materials chart in Appendix 5.[56] (Interpolation may be made between lines for intermediate temperatures.)

The joint efficiency for butt-welded joints shall be taken as unity.

The value of B shall be determined as follows.

Step 1. Using the selected values of t and R_o calculate the value of factor A using the following formula:

$$A = \frac{0.125}{(R_o/t)}$$

Step 2. Using the value of A calculated in Step 1, enter the applicable material chart in Appendix 5 for the material under consideration. Move vertically to an intersection with the material/temperature line for the design temperature (see UG-20). Interpolation may be made between lines for intermediate temperatures.

In cases where the value at A falls to the right of the end of the material/temperature line, assume an intersection with the horizontal projection of the upper end of the material/temperature line. For values of A falling to the left of the material/temperature line, see Step 4.

Step 3. From the intersection obtained in Step 2, move horizontally to the right and read the value of factor B. This is the maximum allowable compressive stress for the values of t and R_o used in Step 1.

Step 4. For values of A falling to the left of the applicable material/temperature line, the value of B, psi, shall be calculated using the following formula:

$$B = \frac{AE}{2}$$

Step 5. Compare the value of B determined in Steps 3 or 4 with the computed longitudinal compressive stress in the cylindrical shell or tube, using the selected

[9] For the basis on which the tabulated stress values have been established, see Appendix P.

[56] Note that the modulus of elasticity values listed in UF-27 of this Division shall not be used for axial compression design. A86

MATERIAL SELECTION GUIDE

	Design Temperature, °F	Material	Plate	Pipe	Forgings	Fittings	Bolting
Cryogenic	-425 to -321	Stainless steel	SA-240-304, 304L, 347 316, 316L	SA-312-304 304L, 347, 316, 316L	SA-182-304, 304L, 347 316, 316L	SA-403 304, 304L, 347, 316, 316L	SA-320-B8 with SA-194-8
	-320 to -151	9 nickel	SA-353	SA-333-8	SA-522-I	SA-420-WPL8	
Low temperature	-150 to -76	3½ nickel	SA-203-D	SA-333-3	SA-350-LF63	SA-420-WPL3	SA-320-L7 with SA-194-4
	-75 to -51	2½ nickel	SA-203-A				
	-50 to -21	Carbon steel	SA-516-55, 60 to SA-20	SA-333-6	SA-350-LF2	SA-420-WPL6	
	-20 to 4		SA-516-All	SA-333-1 or 6			SA-193-B7 with SA-194-2H
	5 to 32		SA-285-C	SA-53-B SA-106-B SA-179	SA-266-Cl2 SA-105 SA-181-60,70	SA-234-WPB	
Intermediate	33 to 60 61 to 775		SA-516-All SA-515-All SA-455-II				
Temperature	776 to 875	C-½Mo	SA-204-B	SA-335-P1	SA-182-F1	SA-234-WP1	
	876 to 1000	1¼Cr-½Mo	SA-387-12	SA-335-P12	SA-182-F12	SA-234-WP12	
		2¼Cr-1Mo	SA-387-22-1	SA-335-P11	SA-182-F11	SA-234-WP11	
	1001 to 1100	2¼Cr-1Mo	SA-387-22-1	SA-335-P22	SA-182-F22	SA-234-WP22	with SA-193-B5 SA-194-3
Elevated	1101 to 1500	Stainless steel	SA-240-347H	SA-312-347H	SA-182-347H	SA-403-347H	SA-193-B8 with SA-194-8
		Incoloy	SB-424	SB-423	SB-425	SB-366	
	Above 1500	Inconel	SB-443	SB-444	SB-446	SB-366	

TABLE UCS-23 (CONT'D)
MAXIMUM ALLOWABLE STRESS VALUES IN TENSION FOR CARBON AND LOW ALLOY STEEL
(Caution: See UW-12 for vessels constructed under Part UW)

	Spec. No.	Grade	Nominal Composition	P-No.	Group No.	Notes	Specified Min. Yield, ksi	Specified Min. Tensile, ksi
	Carbon Steel Plates and Sheets							
	SA-36	. . .	C–Mn–Si	1	1	(1)(2)(3)(17)	36	58
	SA-283	A	C	1	1	(1)(2)	24	45
		B	C	1	1	(1)(2)	27	50
		C	C	1	1	(1)(2)	30	55
		D	C	1	1	(1)(2)	33	60
	SA-285	A	C	1	1	(3)(17)(22)	24	45
		B	C	1	1	(3)(17)(22)	27	50
		C	C	1	1	(3)(17)(22)	30	55
	SA-299	. . .	C–Mn–Si	1	2	(17)	40/42	75
	SA-414	A	C	1	1	(3)(17)	25	45
		B	C	1	1	(3)(17)	30	50
		C	C	1	1	(3)(17)	33	55
		D	C–Mn	1	1	(3)(17)	35	60
		E	C–Mn	1	1	(3)(17)	38	65
		F	C–Mn	1	2	(3)(17)	42	70
		G	C–Mn	1	2	(3)(17)	45	75
	SA-442	55	C–Mn–Si	1	1	(17)	30	55
		60	C–Mn–Si	1	1	(17)	32	60
	SA-455	Up to 0.375 in. incl.	C–Mn	1	2	(19)	38	75
		Over 0.375 in. to 0.580 in. incl.	C–Mn	1	2	(16)	37	73
		Over 0.580 in. to 0.750 in. incl.	C–Mn	1	2	. . .	35	70
	SA-515	55	C–Si	1	1	(17)	30	55
		60	C–Si	1	1	(17)	32	60
		65	C–Si	1	1	(17)	35	65
		70	C–Si	1	2	(17)	38	70
	SA-516	55	C–Si	1	1	(17)	30	55
		60	C–Mn–Si	1	1	(17)	32	60
		65	C–Mn–Si	1	1	(17)	35	65
		70	C–Mn–Si	1	2	(17)	38	70

TABLE UCS-23 (CONT'D)
MAXIMUM ALLOWABLE STRESS VALUES IN TENSION FOR CARBON AND LOW ALLOY STEEL
(Caution: See UW-12 for vessels constructed under Part UW)

Maximum Allowable Stress, ksi (Multiply by 1000 to Obtain psi), for Metal Temp., °F, Not Exceeding												Spec. No.	Ext. Press. Chart Fig. No.
650	700	750	800	850	900	950	1000	1050	1100	1150	1200		
												Carbon Steel Plates and Sheets	
12.7	...	...	...	...	...	...	...	...	...	...	...	SA-36	5-UCS-28.2
10.4	...	...	...	...	...	...	...	...	...	...	...	SA-283	
11.5	...	...	...	...	...	...	...	...	...	...	...	SA-283	5-UCS-28.1
12.7	...	...	...	...	...	...	...	...	...	...	...	SA-283	
12.7	...	...	...	...	...	...	...	...	...	...	...	SA-283	5-UCS-28.2
11.3	11.0	10.3	9.0	7.8	6.5	...	...	...	...	...	...	SA-285	5-UCS-28.1
12.5	12.1	11.2	9.6	8.1	6.5	...	...	...	...	...	...	SA-285	5-UCS-28.1
13.8	13.3	12.1	10.2	8.4	6.5	...	...	...	...	...	...	SA-285	5-UCS-28.2
18.8	17.7	15.7	12.6	9.6	6.5	4.5	2.5	...	...	...	...	SA-299	5-UCS-28.3
11.3	11.0	10.3	9.0	7.8	6.5	...	...	...	...	...	...	SA-414	5-UCS-28.1
12.5	12.1	11.2	9.6	8.1	6.5	...	...	...	...	...	...		
13.8	13.3	12.1	10.2	8.4	6.5	...	...	...	...	...	...		
15.0	14.3	12.9	10.8	8.6	6.5	...	...	...	...	...	...	SA-414	5-UCS-28.2
16.2	15.5	13.8	11.4	8.9	6.5	...	...	...	...	...	...		
17.5	16.6	14.7	12.0	9.2	6.5	...	...	...	...	...	...		
18.8	17.7	15.7	12.6	9.6	6.5	...	...	...	...	...	...	SA-414	5-UCS-28.3
13.8	13.3	12.1	10.2	8.4	...	...	...	...	...	...	...		
15.0	14.4	13.0	10.8	8.7	...	...	...	...	...	...	...	SA-442	5-UCS-28.2
18.8	...	...	...	...	...	...	...	...	...	...	...		
18.3	...	...	...	...	...	...	...	...	...	...	...	SA-455	5-UCS-28.2
17.5	...	...	...	...	...	...	...	...	...	...	...		
13.8	13.3	12.1	10.2	8.4	6.5	4.5	2.5	...	...	...	...		
15.0	14.4	13.0	10.8	8.7	6.5	4.5	2.5	...	...	...	...		
16.3	15.5	13.9	11.4	9.0	6.5	4.5	2.5	...	...	...	...	SA-515	5-UCS-28.2
17.5	16.6	14.8	12.0	9.3	6.5	4.5	2.5	...	...	...	...		
13.8	13.3	12.1	10.2	8.4	6.5	4.5	2.5	...	...	...	...		
15.0	14.4	13.0	10.8	8.7	6.5	4.5	2.5	...	...	...	...		
16.3	15.5	13.9	11.4	9.0	6.5	4.5	2.5	...	...	...	...	SA-516	5-UCS-28.2
17.5	16.6	14.8	12.0	9.3	6.5	4.5	2.5	...	...	...	...		



TABLE UCS-23 (CONT'D)

GENERAL NOTES:

(a) The stress values in this Table may be interpolated to determine values for intermediate temperatures.

(b) Stress values in restricted shear such as dowel bolts or similar construction in which the shearing member is so restricted that the section under consideration would fail without reduction of area shall be 0.80 times the values in the above Table.

(c) Stress values in bearing shall be 1.60 times the values in the above Table.

A87 (d) Stress values may be used for 100°F and lower if considerations are given to toughness requirements.

NOTES:

(1) See UCS-6(b).

(2) These stress values are one-fourth the specified minimum tensile strength multiplied by a quality factor of 0.92, except for SA-283, Grade D, and SA-36.

(3) For service temperatures above 850°F it is recommended that killed steels containing not less than 0.10% residual silicon be used. Killed steels which have been deoxidized with large amounts of aluminum and rimmed steels may have creep and stress rupture properties in the temperature range above 850°F, which are somewhat less than those on which the values in the above Table are based.

(4) Only killed steel shall be used above 850°F.

(5) To these stress values a quality factor as specified in UG-24 shall be applied for castings.

(6) These stress values apply to normalized and drawn material only.

(7) These stress values are established from a consideration of strength only and will be satisfactory for average service. For bolted joints, where freedom from leakage over a long period of time without retightening is required, lower stress values may be necessary as determined from the relative flexibility of the flange and bolts, and corresponding relaxation properties.

(8) Not permitted above 450°F; allowable stress value 7000 psi.

(9) Between temperatures of 750°F and 1000°F, inclusive, the stress values for SA-515, Grade 70 may be used until high temperature test data become available.

A87 (10) Maximum allowable stress values for temperatures below 700°F are given in the following Table:

Nominal Composition	P-No.	Group No.	Product Form	Spec. No.	Grade	Maximum Allowable Stress, ksi, for Metal Temp., °F, Not Exceeding 100	200	300	400	500	600	650	Ext. Press. Chart Fig. No.
C–Mn–Si	1	2	Plate	SA-537	Cl.1 up to 2.5 in. incl.	17.5	17.5	17.2	17.2	17.2	17.2	17.2	
					Cl.1 over 2.5 in. to 4 in. incl.	16.3	16.3	16.0	16.0	16.0	16.0	16.0	5-UCS-28.4
C–Mn–Si	1	3	Plate	SA-537	Cl.2 up to 2.5 in.	20.0	20.0	20.0	19.8	19.8	19.8	19.7	5-UCS-28.4
					Cl.2 over 2.5 in. to 4 in.	18.8	18.8	18.8	18.6	18.6	18.6	18.6	
					Cl.2 over 4 in. to 6 in.	17.5	17.5	17.5	17.4	17.4	17.4	17.2	5-UCS-28.4 (Use Class 1 Curve)
C–Mn–Ti	1	1	Plate	SA-562	. . .	11.3	10.9	10.3	9.5	9.3	9.3	9.3	5-UCS-28.6
C–Mn–Si	10C	1	Plate	SA-612	0.5 in. & under	20.7	20.7	20.4	20.4	20.4	20.4	20.0	5-UCS-28.3
C–Mn–Si	10C	1	Plate	SA-612	Over 0.5 in. to 1 in.	20.2	20.2	19.8	19.8	19.8	19.8	19.0	5-UCS-28.3
C–Mn–Si	. . .	. . .	Plate	SA-738	. . .	18.8	18.8	18.4	18.4	18.4	18.4	18.4	5-UCS-28.2
C–Mn–Si–Cb–V	1	4	Plate	SA-812	80	25.0	25.0	24.6	24.6	24.6	24.6	24.6	5-UCS-28.2
Mn–V	10A	1	Cast	SA-487	Cl.1N	21.3	20.2	19.7	19.7	19.7	19.2	18.8	5-UCS-28.3

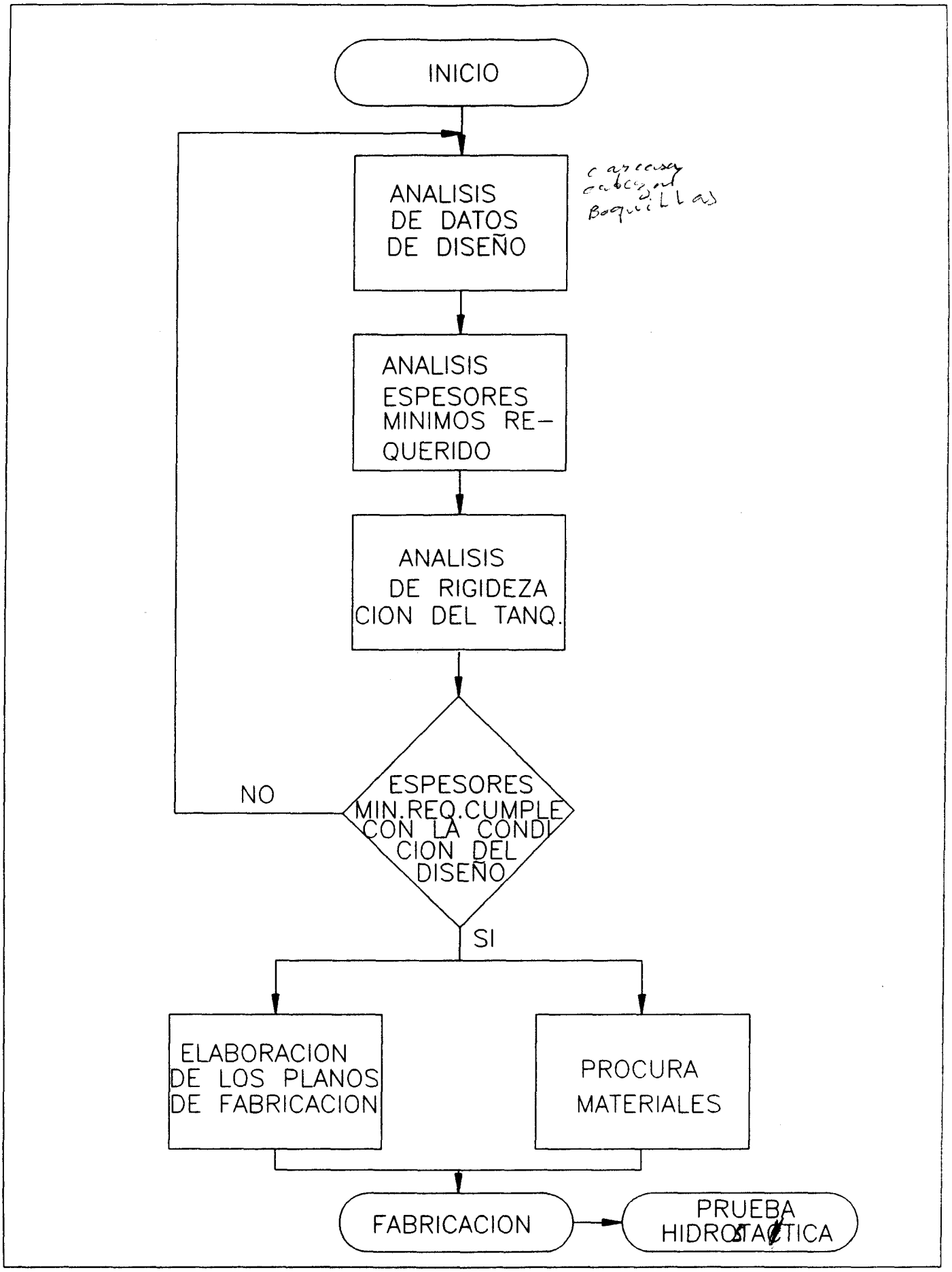
INICIO
ANALISIS DE DATOS DE DISEÑO
ANALISIS ESPESORES MINIMOS RE-QUERIDO
ANALISIS DE RIGIDEZA CION DEL TANQ.
ESPESORES MIN.REQ.CUMPLE CON LA CONDI CION DEL DISEÑO
NO
SI
ELABORACION DE LOS PLANOS DE FABRICACION
PROCURA MATERIALES
FABRICACION
PRUEBA HIDROSTATICA

TECNOCONSULT
INGENIERIA DE CALIDAD

HOJA DE REQUISICION PARA SEPARADORES

PROYECTO: AMBIENTALES. COLECTOR DE VENTEOS-PVC
N° ESPECIFICACION: 854-05-MD-004
N° DE HOJA: 1 DE 3

CLIENTE: PEQUIVEN, S.A. | PLANTA / ESTACION: PVC - Vinilos I.
UBICACION GEOGRAFICA: EL TABLAZO. | IDENTIFICACION (TAG.): MS-2901
CANTIDAD DE UNIDADES REQUERIDAS: UNO (1). | APLICACION: KOD (SEPARADOR GAS-LIQ).

CONDICIONES DE OPERACION

LIQUIDO:		
- FLUJO: (m3/hr) @ P y T de Operación	19	
- DENSIDAD A 60°C:		
- DENSIDAD A TEMP. DE OPERACION: (Kg/m3)	959	
- VISCOSIDAD CINEMATICA:		
- VOLUMEN NORMAL DE LIQUIDO:		
GAS		
- FLUJO [illegible]: @ P y T de Operación (m3/hr)	5462	
- PESO MOLECULAR:		
- DENSIDAD A TEMP. DE OPERACION: (Kg/m3)	5.7	
- PRESION DE OPERACION; [illegible] / NORM. / [illegible]: (Kg/cm2)	2 + F.V (FULL VACUM).	
- TEMPERATURA DE OPERACION; [illegible] / NORM. / [illegible]: (°C)	78	

REQUERIMIENTOS DE DISEÑO

TIPO: VERTICAL / ~~HORIZONTAL / ESFERICO~~		
- DOS FASES / ~~TRES FASES~~		
PRESION DE DISEÑO: (Kg/Cm2)	3.5 + F.V (FULL VACUM)	
TEMPERATURA DE DISEÑO: (°C)	106	
PRESION PARA LA PRUEBA HIDROSTATICA (Kg/cm2)	5.25	
DIAMETRO DE LA CARCAZA: [illegible] / ID: mts	1.3	
VALVULA (S) DE ALIVIO - TIPO / TAMAÑO:		
- PRESION DE AJUSTE		
- CANTIDAD REQUERIDA	UNO (1)	
DISTANCIA ENTRE COSTURAS DE CABEZALES / CARCAZA (MTS)	3.65	
ALTURA DE [illegible] ANGULARES (PATAS) (mm)	977	
TIPO DE CABEZALES (HEADS)	ELIPTICOS (2:1)	
ESPESOR DE CARCAZA / CABEZALES	POR FABRICANTE	(minimo: 1/4")
MARGEN DE CORROSION / ~~REVESTIMIENTO~~ (PULG)	1/8	
EXTRACTOR DE NEBLINA		
MALLA DE ALAMBRE ENTRELAZADA		
- ESPESOR TOTAL DE LA MALLA		
- ESPESOR DEL ALAMBRE		
- DENSIDAD DE LA MALLA		
- AREA DE SUPERFICIE DEL ALAMBRE		
- PANTALLAS DE ALAMBRE ENTRELAZADAS		
- PANTALLA DE ALAMBRE ENTRELAZADAS : SUPERIOR / INFERIOR		
PARRILLAS DE SOPORTE (SUPERIOR E INFERIOR)		
PARRILLAS A SER SUPLIDAS		
AREA LIBRE		

ESPECIFICACION DE MATERIALES

PARTE	N° ASTM	PARTE	N° ASTM
CARCAZA	A-516 gr 70.	PARTES INTERNAS	SS 304
REVESTIMIENTO (CARCAZA)		ACCESORIOS INTERNOS DE TUBERIAS	N/A
CABEZALES	A-516 gr 70.	ESPARRAGOS (EXTERIORES)	A-193 gr B7
REVESTIMIENTO (CABEZALES)		TUERCAS (EXTERIORES)	A 194 gr 2H
ANILLOS DE REFUERZO	A-516 gr 70.	ESPARRAGOS (INTERIORES)	A 193 gr B7
FALDON, BASE, ETC	A-516 gr 70	TUERCAS (INTERIORES)	A 194 gr 2H
ASIENTOS (SADDLES)	N/A	EMPACADURAS (EXTERNAS)	FLEXITALIC TIPO CG / SS 304

PARADO POR:	D	M	A	REV.	FECHA:	APROB:	FECHA DE EMISION:
F. Garcia	27	10	95	REV. Δ	FECHA:	APROB:	APROB:
REVISADO POR: D. DELGADO / D. TOVAR / F. GARCIA	30	10	95	REV. Δ	FECHA: 06/2/96	APROB:	COTIZ.
APROBADO POR: A. FARIA	30	10	95	REV. Δ	FECHA: 23-11-95	APROB:	COMPRA:

TECNOCONSULT INGENIERIA DE CALIDAD	HOJA DE REQUISICION PARA	PROYECTO: Ambientales Colector de Venteos.
	SEPARADORES	Nº ESPECIFICACION: 854-05-MD-004.
		Nº DE HOJA: 3 DE 3

ESQUEMATICO DEL RECIPIENTE

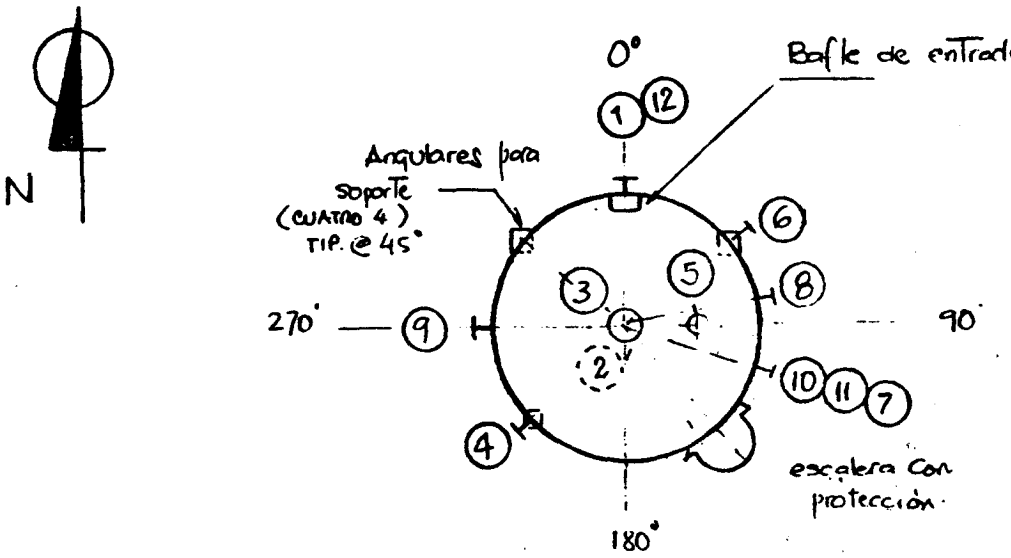

PLANTA

$h = D/4 = 12.75"$

$h/3 = 4.62$

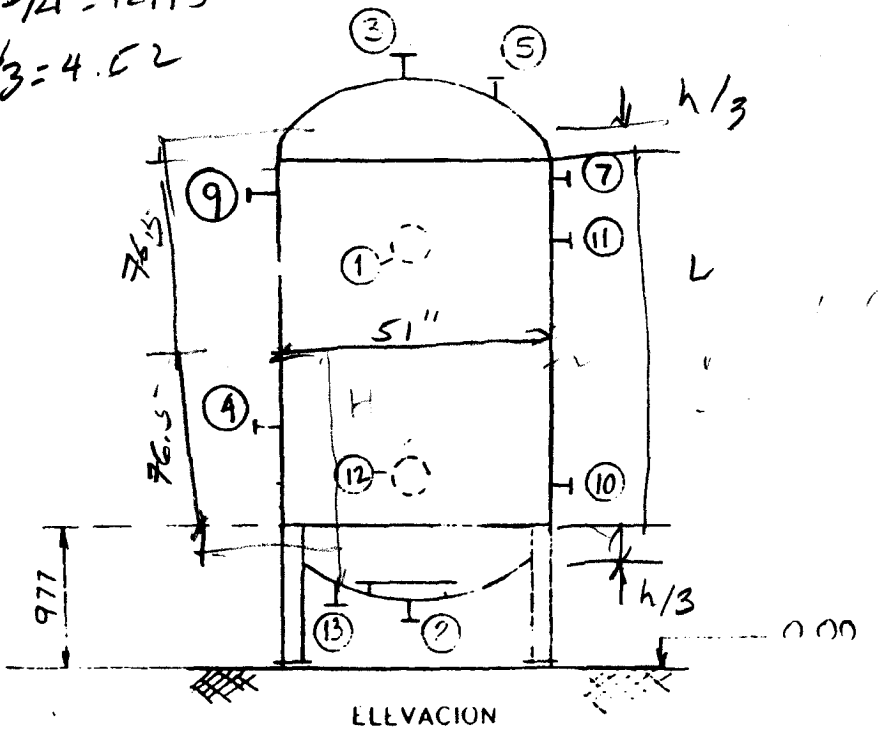

PREPARADO POR:	D	M	A	REV.	FECHA:	APROB:	FECHA DE EMISION:
F. Garcia	27	10	95	REV. 1	FECHA:	APROB:	APROB:
REVISADO POR: D. DELGADO/D HURTADO	30	10	95	REV. 2	FECHA: 06/2/96	APROB:	COTIZ:
APROBADO POR: A. Faria	30	10	95	REV. 3	FECHA: 27-11-95	APROB:	COMPRA:

TECNOCONSULT
INGENIERIA DE CALIDAD

HOJA DE REQUISICION PARA

SEPARADORES

PROYECTO: AMBIENTALES - COLECTOR DE VENTEOS.
Nº ESPECIFICACION: 854-05-MD-004
Nº DE HOJA: 2 DE 3

PARTE	Nº ASTM	PARTE	Nº ASTM
BOQUILLAS (TUBERIAS / PLANCHA)		EMPACADURAS (INTERNAS)	
REVESTIMIENTO DE BOQUILLAS Y		DEMISTER	N/A
BOCA DE VISITA	A-105	- MALLA DE ALAMBRE	
ACCESORIOS SOLDADOS, BRIDAS	A-105	- PARRILLA / PANTALLA	
ANILLOS DE RIGIDEZ	A-36 (1)	- SOPORTE PARA LEVANTAMIENTO	A-516 gr 70
BASES SOPORTES DE TUBERIAS, ETC.			

FABRICACION E INSPECCION

CONSTRUCCION DE ACUERDO A:	ASME SECCION VIII, DIV 1
INSPECCION	VER ESPECIFICACIONES TECNICAS.
ALIVIO DE ESFUERZOS	
TRATAMIENTO TERMICO ESPECIAL	
RADIOGRAFIA	
OTROS ENSAYOS NO DESTRUCTIVOS	
ANALISIS QUIMICO	
CERTIFICADO DE FABRICACION – ANALISIS QUIMICO	
– INFORMACION MECANICA	

PESOS

PESO DE ERECCION : PESO DE EMBARQUE	POR FABRICANTE	Kg.
PESO TOTAL, DE OPERACION		Kg.
PESO TOTAL, LLENO DE AGUA		Kg.
PESO DE PARTES INTERNAS		Kg.
PESO DEL REVESTIMIENTO CONTRA FUEGO		Kg.

PLANOS DE REFERENCIA / LISTAS

ARREGLOS ESQUEMA DE CONSTRUCCION :
RECIPIENTE ESTANDARD
PLANOS ADICIONALES
LISTA DE APROBACION DE ELECTRODOS PARA SOLDADURA, ETC.
NOTAS GENERALES PARA RECIPIENTES

BOQUILLAS DE TUBERIAS BRIDADAS	✓	BASE Y ANILLO DE PERNOS DE ANCLAJE	SI
TERMOPOZOS		SOPORTES PARA LEVANTAMIENTO	SI
ELIMINADOR DE VORTICES	SI	PLACA DE IDENTIFICACION	SI
PROBADOR / [illegible] / ANGULARES		CONEXION DE INSPECCION	SI

ⓐ INFORMACION DE BOQUILLAS

BOQUILLAS	SERVICIO	DIAMETRO	PROYECCION	CLASE	ALT. DESDE EL FONDO	DIST. DESDE EL CENTRO	ORIENTACION
1	Entrada GAS	10"	200	150# WN RF	4427	—	0°
2	Salida LIQ	3"	150	↓	FONDO DEL TANQUE	0	—
3	Salida Gas	4"	200	↓	—	0	—
4	Boca de Visita	20"	250	↓	1587	—	225
5	Valv. Alivio	4"	150	↓	—	300	90°
6	TRASH NIVEL	3"	150	↓	1277	-	45°
7	TRASH NIVEL	1"	-	3000# NPT	4292	-	100°
8	INT NIVEL	1"	150	150# WN RF	1480	-	80°
9	ENTRADA AGUA	2"	150	↓	4477	-	270°
10	VISOR	1"	150	↓	1177	-	100°
11	VISOR	1"	150	↓	4200	-	100°
12	Entrada liquido	2"	150	↓	1277	-	0°
13	Inyección Vapor	1½"	150	300# WN	Fondo del Tanque	350	338°
14	INT. NIVEL	1"	150	150# WN RF	1132	—	80°

(1) EL FABRICANTE DEBE VERIFICAR LA NECESIDAD DE USO DE ANILLOS DE RIGIDEZ

	D	M	A			
PREPARADO POR: F Garcia	27	10	95	REV. △	FECHA:	APROB:
REVISADO POR: D DELGADO / D MORA / F GARCIA	30	10	96	REV. ⚠	FECHA: 06/2/96	APROB:
APROBADO POR: A. FARIA	30	10	96	REV. ⚠	FECHA: 27-11-96	APROB:

FECHA DE EMISION:
APROB:
COTIZ:
COMPRA:

UG-27 THICKNESS OF SHELLS UNDER INTERNAL PRESSURE

(a) The thickness of shells under internal pressure shall be not less than that computed by the following formulas.[13] In addition, provision shall be made for any of the other loadings listed in UG-22, when such loadings are expected. (See UG-16.)

A86 A87 *(b)* The symbols defined below are used in the formulas of this paragraph.

t = minimum required thickness of shell, in.

P = design pressure, psi (see UG-21) (or, maximum allowable working pressure, see UG-98)

R = inside radius of the shell course under consideration,[14] in.

S = maximum allowable stress value, psi (see applicable table of stress values in Subsection C, and the stress limitations specified in UG-24)

E = joint efficiency for, or the efficiency of, appropriate joint in cylindrical or spherical shells, or the efficiency of ligaments between openings, whichever is less.

For welded vessels, use the efficiency specified in UW-12.

For ligaments between openings, use the efficiency calculated by the rules given in UG-53.

(c) Cylindrical Shells. The minimum thickness or maximum allowable working pressure of cylindrical shells shall be the greater thickness or lesser pressure as given by (1) or (2).

(1) Circumferential Stress (Longitudinal Joints). When the thickness does not exceed one-half of the inside radius, or P does not exceed $0.385SE$, the following formulas shall apply:

$$t = \frac{PR}{SE - 0.6P} \quad \text{or} \quad P = \frac{SEt}{R + 0.6t} \qquad (1)$$

(2) Longitudinal Stress (Circumferential Joints).[15] When the thickness does not exceed one-half of the inside radius, or P does not exceed $1.25SE$, the following formulas shall apply:

$$t = \frac{PR}{2SE + 0.4P} \quad \text{or} \quad P = \frac{2SEt}{R - 0.4t} \qquad (2)$$

(d) Spherical Shells. When the thickness of the shell of a wholly spherical vessel does not exceed $0.356R$, or P does not exceed $0.665SE$, the following formulas shall apply:

$$t = \frac{PR}{2SE - 0.2P} \quad \text{or} \quad P = \frac{2SEt}{R + 0.2t} \qquad (3)$$

(e) When necessary, vessels shall be provided with stiffeners or other additional means of support to prevent overstress or large distortions under the external loadings listed in UG-22 other than pressure and temperature.

(f) A stayed jacket shell that extends completely around a cylindrical or spherical vessel shall also meet the requirements of UG-47 (c).

(g) Any reduction in thickness within a shell course or spherical shell shall be in accordance with UW-9.

[13] Formulas in terms of the outside radius and for thicknesses and pressures beyond the limits fixed in this paragraph are given in 1-1 to 1-3.

A87 [14] For pipe, the inside radius R is determined by the nominal outside radius minus the nominal wall thickness.

[15] These formulas will govern only when the circumferential joint efficiency is less than one-half the longitudinal joint efficiency, or when the effect of supplementary loadings (UG-22) causing longitudinal bending or tension in conjunction with internal pressure is being investigated. An example illustrating this investigation is given in L-2(a) and (b).

Table 2-1
General Vessel Formulas

Part	Stress Formula	Thickness, t		Pressure, P		Stress, S	
		I.D.	O.D.	I.D.	O.D.	I.D.	O.D.
Shell							
Longitudinal [1, Section UG-27(c)(2)]	$\sigma_l = \frac{PR_m}{2t}$	$\frac{PR_i}{2SE + .4P}$	$\frac{PR_o}{2SE + 1.4P}$	$\frac{2SEt}{R_i - .4t}$	$\frac{2SEt}{R_o - 1.4t}$	$\frac{P(R_i - .4t)}{2Et}$	$\frac{P(R_o - 1.4t)}{2Et}$
Circumferential [1, Section UG-27(c)(1), Section 1-1(a)(1)]	$\sigma_c = \frac{PR_m}{t}$	$\frac{PR_i}{SE - .6P}$	$\frac{PR_o}{SE + .4P}$	$\frac{SEt}{R_i + .6t}$	$\frac{SEt}{R_o - .4t}$	$\frac{P(R_i + .6t)}{Et}$	$\frac{P(R_o - .4t)}{Et}$
Heads							
Hemi-sphere [1, Section 1-1(a)(2), Section UG-27(d)]	$\sigma_l = \sigma_c = \frac{PR_m}{2t}$	$\frac{PR_i}{2SE - 2P}$	$\frac{PR_o}{2SE + 8P}$	$\frac{2SEt}{R_i + 2t}$	$\frac{2SEt}{R_o - .8t}$	$\frac{P(R_i + .2t)}{2Et}$	$\frac{P(R_o - .8t)}{2Et}$
Ellipsoidal [1, Section 1-4(c)]	See PROCEDURE 2-2	$\frac{PD_iK}{2SE - .2P}$	$\frac{PD_oK}{2SE + 2P(K - .1)}$	$\frac{2SEt}{KD_i + .2t}$	$\frac{2SEt}{KD_o - 2t(K - .1)}$	See PROCEDURE 2-2	
2:1 S E [1, Section UG-32(d)]		$\frac{PD_i}{2SE - .2P}$	$\frac{PD_o}{2SE + 1.8P}$	$\frac{2SEt}{D_i + .2t}$	$\frac{2SEt}{D_o - 1.8t}$		
100%-6% torispherical [1, Section UG-32(e)]		$\frac{.885PL_i}{SE - .1P}$	$\frac{.885PL_o}{SE + .8P}$	$\frac{SEt}{.885L_i + .1t}$	$\frac{SEt}{.885L_o - .8t}$		
Torispherical $L/r = 16.66$ [1, Section 1-4(d)]		$\frac{PL_iM}{2SE - 2P}$	$\frac{PL_oM}{2SE + P(M - .2)}$	$\frac{2SEt}{L_iM + .2t}$	$\frac{2SEt}{L_oM - t(M - .2)}$		
Cone							
Longitudinal	$\sigma_l = \frac{PR_m}{2t\cos\alpha}$	$\frac{PD_i}{4\cos\alpha(SE + .4P)}$	$\frac{PD_o}{4\cos\alpha(SE + 1.4P)}$	$\frac{4SEt\cos\alpha}{D_i - .8t\cos\alpha}$	$\frac{4SEt\cos\alpha}{D_o - 2.8t\cos\alpha}$	$\frac{P(D_i - .8t\cos\alpha)}{4Et\cos\alpha}$	$\frac{P(D_o - 2.8t\cos\alpha)}{4Et\cos\alpha}$
Circumferential [1, Section 1-4(e), Section UG-32(g)]	$\sigma_c = \frac{PR_m}{2t\cos\alpha}$	$\frac{PD_i}{2\cos\alpha(SE - .6P)}$	$\frac{PD_o}{2\cos\alpha(SE + .4P)}$	$\frac{2SEt\cos\alpha}{D_i + 1.2t\cos\alpha}$	$\frac{2SEt\cos\alpha}{D_o - .8t\cos\alpha}$	$\frac{P(D_i + 1.2t\cos\alpha)}{2Et\cos\alpha}$	$\frac{P(D_o - .8t\cos\alpha)}{2Et\cos\alpha}$

APPENDIX 1
SUPPLEMENTARY DESIGN FORMULAS

1-1 THICKNESS OF CYLINDRICAL AND SPHERICAL SHELLS

(a) The following formulas, in terms of the outside radius, are equivalent to and may be used instead of those given in UG-27(c) and (d).

(1) For cylindrical shells:

$$t = \frac{PR_o}{SE + 0.4P} \quad \text{or} \quad P = \frac{SEt}{R_o - 0.4t}$$

where

R_o = outside radius of the shell course under consideration, in.

(2) For spherical shells:

$$t = \frac{PR_o}{2SE + 0.8P}$$

$$P = \frac{2SEt}{R_o - 0.8t}$$

Other symbols are as defined in UG-27.

1-2 THICK CYLINDRICAL SHELLS

(a)(1) Circumferential Stress (Longitudinal Joints). When the thickness of the cylindrical shell under internal pressure exceeds one-half of the inside radius, or when P exceeds $0.385SE$, the following formulas shall apply:

When P is known and t is desired:

$$t = R(Z^{1/2} - 1) = R_o\frac{(Z^{1/2} - 1)}{Z^{1/2}}$$

where

$$Z = \frac{SE + P}{SE - P}$$

Where t is known and P is desired:

$$P = SE\left(\frac{Z - 1}{Z + 1}\right)$$

where

$$Z = \left(\frac{R + t}{R}\right)^2 = \left(\frac{R_o}{R}\right)^2 = \left(\frac{R_o}{R_o - t}\right)^2$$

(2) Longitudinal Stress (Circumferential Joints). When the thickness of the cylindrical shell under internal pressure exceeds one-half of the inside radius, or when P exceeds $1.25SE$, the following formulas shall apply:

When P is known and t is desired:

$$t = R\,(Z^{1/2} - 1) = R_o\left(\frac{Z^{1/2} - 1}{Z^{1/2}}\right)$$

where

$$Z = \left(\frac{P}{SE} + 1\right)$$

When t is known and P is desired:

$$P = SE(Z - 1)$$

where

$$Z = \left(\frac{R + t}{R}\right)^2 = \left(\frac{R_o}{R}\right)^2 = \left(\frac{R_o}{R_o - t}\right)^2$$

Symbols are as defined in UG-27 and 1-1.

1-3 THICK SPHERICAL SHELLS

When the thickness of the shell of a wholly spherical vessel or of a hemispherical head under internal pres-

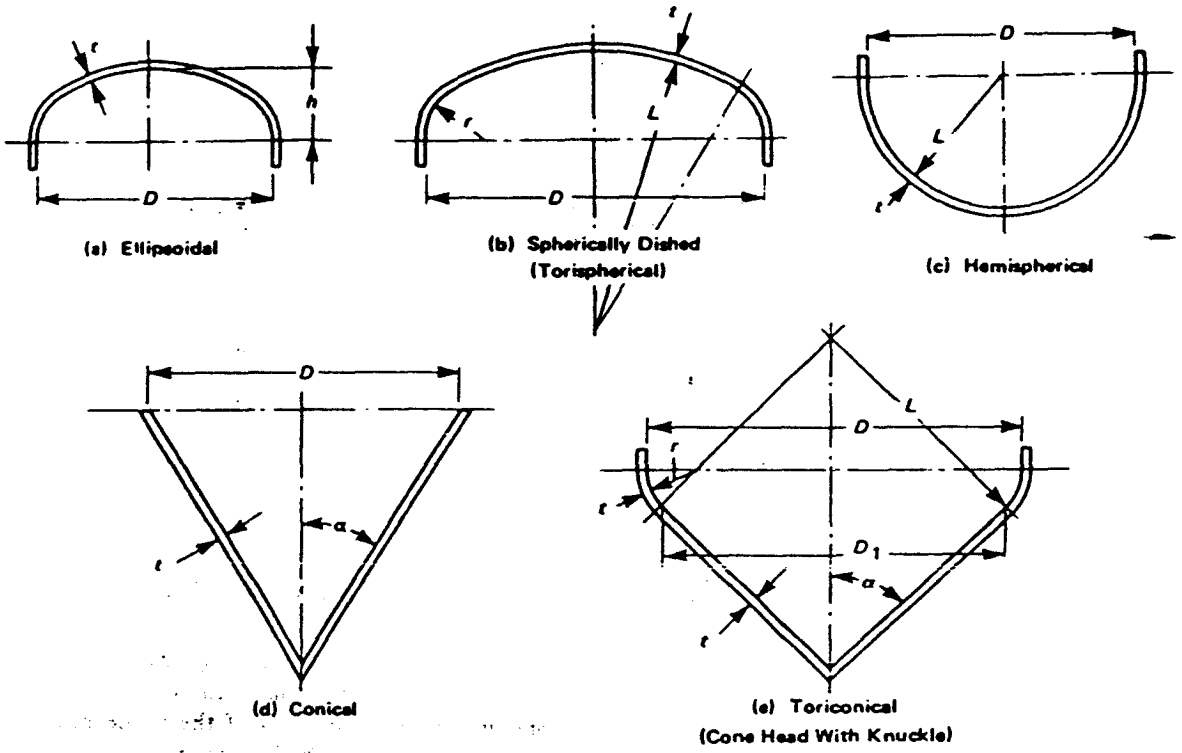

FIG. 1-4 PRINCIPAL DIMENSIONS OF TYPICAL HEADS

sure exceeds $0.356R$, or when P exceeds $0.665SE$, the following formulas shall apply:
When P is known and t is desired:

$$t = R(Y^{1/3} - 1) = R_o\left(\frac{Y^{1/3} - 1}{Y^{1/3}}\right)$$

where

$$Y = \frac{2(SE + P)}{2SE - P}$$

When t is known and P is desired:

$$P = 2SE\left(\frac{Y - 1}{Y + 2}\right)$$

where

$$Y = \left(\frac{R + t}{R}\right)^3 = \left(\frac{R_o}{R_o - t}\right)^3$$

Symbols are as defined in UG-27 and 1-1.

1-4 FORMULAS FOR THE DESIGN OF FORMED HEADS UNDER INTERNAL PRESSURE

(a) The formulas of this paragraph provide for the design of formed heads of proportions other than those given in UG-32, in terms of inside and outside diameter.

(b) The symbols defined below are used in the formulas of this paragraph (see Fig. 1-4): A87

t = minimum required thickness of head after forming, in.

P = design pressure, psi (see UG-21) (or maximum allowable working pressure for existing vessels, see UG-98)

D = inside diameter of the head skirt; or inside length of the major axis of an ellipsoidal head; or inside diameter of a cone head at the point under consideration measured perpendicular to the longitudinal axis, in.

D_o = outside diameter of the head skirt; or outside length of the major axis of an ellipsoidal head; or outside diameter of a cone head at the point under consideration measured perpendicular to the longitudinal axis, in.

S = maximum allowable working stress, as given in Subsection C, psi, except as limited by footnote 1 to 1-4(c) and (d), UG-24, UG-32(e), and UW-12.

A86 E = lowest efficiency of any Category A joint in the head (for hemispherical heads this includes head-to-shell joint). For welded vessels, use the efficiency specified in UW-12.

r = inside knuckle radius, in.

L = inside spherical or crown radius for torispherical and hemispherical heads, in.

$L = K_1 D$ for ellipsoidal heads in which K_1 is obtained from Table UG-37, in.

L_o = outside spherical or crown radius, in.

L/r = ratio of the inside crown radius to the inside knuckle radius, used in Table 1-4.2

M = a factor in the formulas for torispherical heads depending on the head proportion L/r

h = one-half of the length of the minor axis of the ellipsoidal head, or the inside depth of the ellipsoidal head measured from the tangent line (head-bend line), in.

K = a factor in the formulas for ellipsoidal heads depending on the head proportion $D/2h$

$D/2h$ = ratio of the major to the minor axis of ellipsoidal heads, which equals the inside diameter of the skirt of the head divided by twice the inside height of the head, and is used in Table 1-4.1

α = one-half of the included (apex) angle of the cone at the center line of the head

(c) Ellipsoidal Heads[1]

$$t = \frac{PDK}{2SE - 0.2P} \text{ or } P = \frac{2SEt}{KD + 0.2t} \qquad (1)$$

$$t = \frac{PD_oK}{2SE + 2P(K - 0.1)}$$

$$P = \frac{2SEt}{KD_o - 2t(K - 0.1)} \qquad (2)$$

where

$$K = \frac{1}{6}\left[2 + \left(\frac{D}{2h}\right)^2\right]$$

Numerical values of the factor K are given in Table 1-4.1.

Example 1.[2] Determine the required thickness t of a seamless ellipsoidal head, exclusive of provision for corrosion for the following conditions:

D = 40 in; h = 9 in; P = 200 psi; S = 13,750 psi; E = 1.00.

$$\frac{D}{2h} = \frac{40}{18} = 2.22$$

From Table 1-4.1, K = 1.14. Substituting in Eq. (1)

$$t = \frac{200 \times 40 \times 1.14}{[2 \times 13{,}750 \times (1.00) - (0.2 \times 200)]} = 0.33 \text{ in.}$$

Example 2.[2] Determine the maximum allowable working pressure P of a seamless ellipsoidal head for the following conditions:

D = 30 in.; h = 7.5 in.; total thickness = ½ in. with no allowance for corrosion; maximum operating temperature = 800°F; E = 1.00.

From the appropriate table in Subsection C, S = 10,200 psi.

$$\frac{D}{2h} = \frac{30}{15} = 2.0$$

From Table 1-4.1, K = 1.0. Substituting in Eq. (1)

$$P = \frac{2 \times 10{,}200 \times 1.0 \times 0.5}{[1 \times 30 + (0.2 \times 0.5)]} = 339 \text{ psi}$$

[1] Ellipsoidal heads designed under $K > 1.0$ and all torispherical heads made of materials having a specified minimum tensile strength exceeding 80,000 psi shall be designed using a value of S equal to 20,000 psi at room temperature and reduced in proportion to the reduction in maximum allowable stress values at temperature for the material as shown in the appropriate table of Subsection C.

[2] This calculation is intended only to illustrate the use of the formula herein. Other paragraphs in this Division may have to be satisfied to permit use of the full tabular stress value.

altura de un cabezal elíptico es D/4

TABLE 1-4.1
VALUES OF FACTOR K
(Use Nearest Value of $D/2h$; Interpolation Unnecessary)

$D/2h$	3.0	2.9	2.8	2.7	2.6	2.5	2.4	2.3	2.2	2.1	2.0
K	1.83	1.73	1.64	1.55	1.46	1.37	1.29	1.21	1.14	1.07	1.00
$D/2h$	1.9	1.8	1.7	1.6	1.5	1.4	1.3	1.2	1.1	1.0	
K	0.93	0.87	0.81	0.76	0.71	0.66	0.61	0.57	0.53	0.50	

TABLE 1-4.2
VALUES OF FACTOR M
(Use Nearest Value of L/r; Interpolation Unnecessary)

L/r	1.0	1.25	1.50	1.75	2.00	2.25	2.50	2.75	3.00	3.25	3.50
M	1.00	1.03	1.06	1.08	1.10	1.13	1.15	1.17	1.18	1.20	1.22
L/r	4.0	4.5	5.0	5.5	6.0	6.5	7.0	7.5	8.0	8.5	9.0
M	1.25	1.28	1.31	1.34	1.36	1.39	1.41	1.44	1.46	1.48	1.50
L/r	9.5	10.00	10.5	11.0	11.5	12.0	13.0	14.0	15.0	16.0	16⅔[1]
M	1.52	1.54	1.56	1.58	1.60	1.62	1.65	1.69	1.72	1.75	1.77

NOTE:
(1) Maximum ratio allowed by UG-32(j) when L equals the outside diameter of the skirt of the head.

(d) Torispherical Heads[1]

$$t = \frac{PLM}{2SE - 0.2P} \quad \text{or} \quad P = \frac{2SEt}{LM + 0.2t} \tag{3}$$

$$t = \frac{PL_oM}{2SE + P(M - 0.2)}$$

or

$$P = \frac{2SEt}{ML_o - t(M - 0.2)} \tag{4}$$

where

$$M = \tfrac{1}{4}\left(3 + \sqrt{\frac{L}{r}}\right)$$

Numerical values of the factor M are given in Table 1-4.2.

Example 1.[2] Determine the required thickness t, exclusive of allowance for corrosion, of a torispherical head for the following conditions:

$D = 40$ in.; $L = 40$ in.; $r = 4$ in.; $P = 200$ psi; $S = 13{,}750$ psi; $E = 1.00$ (seamless head).

$$\frac{L}{r} = \frac{40}{4} = 10$$

and from Table 1-4.2, $M = 1.54$. Substituting in Eq. (3)

$$t = \frac{200 \times 40 \times 1.54}{[2 \times 13{,}750 \times (1.00) - (0.2 \times 200)]} = 0.45 \text{ in.}$$

Example 2.[2] Determine the maximum allowable working pressure P of a torispherical head for the following conditions:

$D = 30$ in.; $L = 24$ in.; $r = 2.00$ in.; $E = 1.00$ (seamless head); total thickness = 0.5 in. with no allowance for corrosion; material conforms to SA-515 Grade 70; maximum operating temperature = 900°F.

From the appropriate table in Subsection C, $S = 6500$ psi.

TABLE 1-5.1
VALUES OF Δ FOR JUNCTIONS AT THE LARGE CYLINDER FOR $\alpha \leq 30$ deg.

P/x	0.001	0.002	0.003	0.004	0.005
Δ, deg.	11	15	18	21	23
P/x	0.006	0.007	0.008	0.009[1]	
Δ, deg.	25	27	28.5	30	

NOTE:
(1) Δ = 30 deg. for greater values of P/x.

TABLE 1-5.2
VALUES OF Δ FOR JUNCTIONS AT THE SMALL CYLINDER FOR $\alpha \leq 30$ deg.

P/x	0.002	0.005	0.010	0.02
Δ, deg.	4	6	9	12.5
P/x	0.04	0.08	0.10	0.125[1]
Δ, deg.	17.5	24	27	30

NOTE:
(1) Δ = 30 deg. for greater values of P/x.

$$\frac{L}{r} = \frac{24}{2.00} = 12.0$$

From Table 1-4.2, $M = 1.62$. Substituting in Eq. (3)

$$P = \frac{2 \times 6500 \times 1.0 \times 0.5}{24 \times 1.62 + 0.2 \times 0.5} = 167 \text{ psi}$$

(e) Conical Heads

$$t = \frac{PD}{2 \cos \alpha \, (SE - 0.6P)}$$

or

$$P = \frac{2SEt \cos \alpha}{D + 1.2t \cos \alpha} \quad (5)$$

$$t = \frac{PD_0}{2 \cos \alpha \, (SE + 0.4P)}$$

or

$$P = \frac{2SEt \cos \alpha}{D_0 - 0.8t \cos \alpha} \quad (6)$$

1-5 RULES FOR CONICAL REDUCER SECTIONS AND CONICAL HEADS UNDER INTERNAL PRESSURE

(a) The formulas of (d) and (e) provide for the design of reinforcement, if needed, at the cone-to-cylinder junctions for conical reducer sections and conical heads where all the elements have a common axis and the half-apex angle $\alpha \leq 30$ deg. Subparagraph (g) provides for special analysis in the design of cone-to-cylinder intersections with or without reinforcing rings where α is greater than 30 deg.

In the design of reinforcement for a cone-to-cylinder juncture, the requirements of UG-41 shall be met.

(b) Nomenclature A86 A87

A_{rL} = required area of reinforcement at large end of cone, in.^{2}
A_{rs} = required area of reinforcement at small end of cone, in.^{2}
A_e = effective area of reinforcement at intersection due to excessive metal thickness, in.^{2}
E_s = modulus of elasticity of cylinder material, psi
E_c = modulus of elasticity of cone material, psi
E_r = modulus of elasticity of reinforcing ring material, psi
E_1 = efficiency of longitudinal joint in cylinder. For compression (such as at large end of cone), $E_1 = 1.0$ for butt welds.
E_2 = efficiency of longitudinal joint in cone. For compression, $E_2 = 1.0$ for butt welds.
E_3 = weld joint efficiency in reinforcing ring. For compression, $E_3 = 1.0$ for butt welds.
P = design pressure, psi
R_s = inside radius of small cylinder or small end of cone, in.
R_L = inside radius of large cylinder or large end of cone, in.
S_s = allowable stress of cylinder material at design temperature, psi
S_c = allowable stress of cone material at design temperature, psi
S_r = allowable stress of reinforcing ring material at design temperature, psi
t = minimum required thickness of cylinder at cone-to-cylinder junction, in.
t_s = nominal thickness of cylinder at cone-to-cylinder junction, in.
t_c = nominal thickness of cone at cone-to-cylinder junction, in.
α = half-apex angle of cone or conical section, deg.

Δ = angle indicating need for reinforcement at cone-to-cylinder junction having a half-apex angle $\alpha \leq 30$ deg. When $\Delta \geq \alpha$, no reinforcement is required at the junction (see Tables 1-5.1 and 1-5.2), deg.

m = the smaller of

$$\left[\frac{t_s}{t}\cos(\alpha - \Delta)\right]$$

or

$$\left[\frac{t_s \cos\alpha \cos(\alpha - \Delta)}{t}\right]$$

t_s = the smaller of $(t_s - t)$ or $[t_c - (t/\cos\alpha)]$

x = cone-to-cylinder factor
= the smaller of $S_s E_1$ or $S_c E_2$

y = cone-to-cylinder factor
= the greater of $S_s E_s$ or $S_c E_c$

(c) For a cone-to-cylinder junction, the following values shall be determined at large end and again at the small end in order that both the large end and the small end can be examined:

Determine P/x and then determine Δ at the large end and at the small end, as appropriate, from Tables 1-5.1 and 1-5.2.

Determine $k = y/S_c E_c$, but k not less than 1.0.

(d) Reinforcement shall be provided at the junction of the cone with the large cylinder for conical heads and reducers without knuckles when the value of Δ obtained from Table 1-5.1, using the appropriate ratio P/x, is less than α. Interpolation may be made in the Table.

The cross-sectional area of the reinforcement ring shall be at least equal to that indicated by the following formula:

$$A_s = \frac{PR_L^2 k}{2x}\left(1 - \frac{\Delta}{\alpha}\right)\tan\alpha \qquad (1)$$

When the thickness, less corrosion allowance, of both the reducer and cylinder exceeds that required by the applicable design formulas, the minimum excess thickness may be considered to contribute to the required reinforcement ring in accordance with the following formula:

$$A_s = 4t_s\sqrt{R_L t_s} \qquad (2)$$

Any additional area of reinforcement which is required shall be situated within a distance of $\sqrt{R_L t_s}$ from the junction of the reducer and the cylinder. The centroid of the added area shall be within a distance of $0.5 \times \sqrt{R_L t_s}$ from the junction.

(e) Reinforcement shall be provided at the junction of the conical shell of a reducer without a flare and the small cylinder when the value of Δ obtained from Table 1-5.2, using the appropriate ratio P/x, is less than α. A87

The cross-sectional area of the reinforcement ring shall be at least equal to that indicated by the following formula:

$$A_s = \frac{PR_s^2 k}{2x}\left(1 - \frac{\Delta}{\alpha}\right)\tan\alpha \qquad (3)$$

When the thickness, less corrosion allowance, of the reducer and/or the cylinder exceeds that required by the applicable design formula, the excess thickness may be considered to contribute to the required reinforcement ring in accordance with the following formula:

$$A_s = m\sqrt{R_s t_s}\,[(t_s - t/\cos\alpha) + (t_s - t)] \qquad (4)$$

Any additional area of reinforcement which is required shall be situated within a distance of $\sqrt{R_s t_s}$ from the junction, and the centroid of the added area shall be within a distance of $0.5\sqrt{R_s t_s}$ from the junction.

(f) Reducers not described in UG-36(e)(5), such as those made up of two or more conical frustums having different slopes, may be designed in accordance with (g).

(g) When the half-apex angle α is greater than 30 deg., cone-to-cylinder junctions without a knuckle may be used, with or without reinforcing rings, if the design is based on special analysis, such as the beam-on-elastic-foundation analysis of Timoshenko, Hetenyi, or Watts and Lang. See U-2(g). When such an analysis is made, the calculated localized stresses at the discontinuity shall not exceed the following values.

(1) (Membrane hoop stress) + (average discontinuity hoop stress) shall not be greater than $1\frac{1}{2}$ SE, where the "average discontinuity hoop stress" is the average hoop stress across the wall thickness due to the discontinuity at the junction, disregarding the effect of Poisson's ratio times the longitudinal stress at the surfaces.

(2) (Membrane longitudinal stress) + (discontinuity longitudinal stress due to bending) shall not be greater than $4SE$.

The angle joint [see 3-1(s)] between the cone and cylinder shall be designed equivalent to a double butt-welded joint, and because of the high bending stress, there shall be no weak zones around the angle joint. The thickness of the cylinder may have to be increased

UG-98 MAXIMUM ALLOWABLE WORKING PRESSURE

(a) The maximum allowable working pressure for a vessel is the maximum pressure permissible at the top of the vessel in its normal operating position at the operating temperature specified for that pressure. It is the least of the values found for maximum allowable working pressure for any of the essential parts of the vessel by the principles given in (b), and adjusted for any difference in static head that may exist between the part considered and the top of the vessel. [See 3-1(a).]

(b) The maximum allowable working pressure for a vessel part is the maximum internal or external pressure, including the static head thereon, as determined by the rules and formulas in this Division, together with the effect of any combination of loadings listed in UG-22 which are likely to occur, for the designated coincident operating temperature, excluding any metal thickness specified as corrosion allowance. See UG-25.

(c) Maximum allowable working pressure may be determined for more than one designated operating temperature, using for each temperature the applicable allowable stress value.

TABLES 2
PRESSURE-TEMPERATURE RATINGS

TABLE 2-150 CLASS 150 PRESSURE-TEMPERATURE RATINGS

Pressures are in pounds per square inch, gage (psig)

Mat'l Group	1.1	1.2	1.4	1.5	1.7	1.9	1.10	1.13	1.14	2.1	2.2	2.3	2.4	2.5	2.6	2.7	
Materials	Carbon steel			C-½Mo	½Cr-½Mo Ni-Cr-Mo	1¼Cr-½Mo	2¼Cr-1Mo	5Cr-½Mo	9Cr-1Mo	Type 304	Type 316	Type 304L Type 316L	Type 321	Types 347 348	Type 309	Type 310	Temperature °F
Temp, °F	Norm.	High	Low														
-20 to 100	285	290	235	265		290				275	275	230	275	275	260		100
200	260	260	215			260				235	240	195	235	245	230		200
300	230	230	210			230				205	215	175	210	225	220		300
400					200					180	195	160	190		200		400
500					170					170		145			170		500
600					140					140		140			140		600
650					125					125		125			125		650
700					110					110		110			110		700
750					95					95		95			95		750
800					80					80		80			80		800
850					65					65		65			65		850
900					50					50					50		900
950					35					35					35		950
1000					20					20					20		1000

NOTES:

1. Ratings shown apply to other material groups where column dividing lines have been omitted.
2. Provisions of Section 2 apply to all ratings.
3. Temperature notes for all Material Groups, Tables 2—150 through 2—2500:

Mat'l Group	Materials[4] (Spec-Grade)	See Notes
1.1	A105, A181-I[, A216-WCB, A515-70	(a)(h)
	A516-70	(a)(g)
	A350-LF2, A537-C1.1	(d)
1.2	A203-B, A203-E, A216-WCC	(a)(h)
	A350-LF3, A352-LC2, A352-LC3	(d)
1.4	A181-I, A515-60	(a)(h)
	A516-60	(a)(g)
	A350-LF1	(d)
1.5	A182-F1, A204-A, A204-B, A217-WC1	(b)(h)
	A352-LC1	(d)
1.7	A204-C	(g)
	A182-F2, A217-WC4	(h)
	A217-WC5	(i)
1.9	A182-F11, A182-F12, A387-11, CL.2	(c)
	A217-WC6	(j)
1.10	A182-F22, A387-22, CL.2	(c)
	A217-WC9	(j)
1.13	A182-F5a, A217-C5	–
1.14	A182-F9, A217-C12	–

Mat'l Group	Materials[4] (Spec-Grade)	See Notes
2.1	A182-F304, A182-F304H	–
	A240-304, A351-CF8	–
	A351-CF3	(f)
2.2	A182-F316, A182-F316H, A240-316	–
	A240-317, A351-CF8M	–
	A351-CF3M	(g)
2.3	A182-F304L, A240-304L	(f)
	A182-F316L, A240-316L	(g)
2.4	A182-F321, A240-321	(h)
	A182-F321H, A240-321H	–
2.5	A182-F347, A240-347	(h)
	A182-F347H, A240-347H	–
	A182-F348, A240-348	(h)
	A182-F348H, A240-F348H	–
2.6	A240-309S, A351-CH8, A351-CH20	–
2.7	A182-F310, A240-310S	(k)
	A351 CK20	–

(a) permissible but not recommended for prolonged use above about 800° F
(b) permissible but not recommended for prolonged use above about 850° F
(c) permissible but not recommended for prolonged use above about 1100° F
(d) not to be used over 650° F
(f) not to be used over 800° F
(g) not to be used over 850° F
(h) not to be used over 1000° F
(i) not to be used over 1050° F
(j) not to be used over 1100° F
(k) for service temperature 1050° F and above, assurance must be provided that grain size is not finer than ASTM No. 6.

4. See Table 1A for additional information and notes relating to specific materials.

UG-45 NOZZLE NECK THICKNESS

(a) Except for access openings and openings for inspection only, the wall thickness of a nozzle neck or other connection shall not be less than the greater of the following:

(1) the thickness computed for the applicable loadings in UG-22 plus the thickness added for corrosion allowance on the connection;

(2) the smallest of the following:

(a) for vessels under internal pressure only, the thickness (plus corrosion allowance) required for pressure (assuming $E = 1.0$) for the shell or head at the location where the nozzle neck or other connection attaches to the vessel but in no case less than the minimum thickness specified for the material in UG-16(b);

(b) for vessels under external pressure only, the thickness (plus corrosion allowance) obtained by using the external design pressure as an equivalent internal design pressure (assuming $E = 1.0$) in the formula for the shell or head at the location where the nozzle neck or other connection attaches to the vessel but in no case less than the minimum thickness specified for the material in UG-16(b);

(c) for vessels designed for both internal and external pressure, the greater of the thicknesses determined by (2)(a) or (2)(b) above;

(d) the minimum thickness[24] of standard wall pipe plus the thickness added for corrosion allowance on the connection; for nozzles larger than the largest pipe size included in ANSI B36.10, the wall thickness of that largest size plus the thickness added for corrosion allowance on the connection.

(b) For access openings and openings for inspection only, the wall thickness of a nozzle neck or other connection where it attaches to the vessel shall not be less than the thickness computed for the applicable loadings in UG-22 plus the thickness added for corrosion allowance on the connection.

(c) The allowable stress value for shear in the nozzle neck shall be 70% of the allowable tensile stress for the nozzle material.

[24]The minimum thickness for all materials is that wall thickness listed in Table 2 of ANSI B36.10, less 12½%. For diameters other than those listed as standard (STD) in the Table, this shall be based upon the next larger pipe size. When a material specification does not specify schedule weights conforming to ANSI B36.10, the pipe weight indicated as regular shall be used when so designated in the specification. If not so designated, the heaviest schedule listed shall be used even though this is less than the thickness of standard weight pipe of ANSI B36.10.

[25]All dimensions given, for size of vessel on which inspection openings are required, are nominal.

UG-37 REINFORCEMENT REQUIRED FOR OPENINGS IN SHELLS AND FORMED HEADS

(a) Nomenclature. The symbols used in this paragraph are defined as follows:

A = total cross-sectional area of reinforcement required in the plane under consideration, sq in. (see Fig. UG-37.1) (includes consideration of nozzle area through shell if $S_n/S_v < 1.0$)

A_1 = area in excess thickness in the vessel wall available for reinforcement, sq in. (see Fig. UG-37.1) (includes consideration of nozzle area through shell if $S_n/S_v < 1.0$)

A_2 = area in excess thickness in the nozzle wall available for reinforcement, sq in. (see Fig. UG-37.1)

A_3 = area available for reinforcement when the nozzle extends inside the vessel wall, sq in. (see Fig. UG-37.1)

A_{41}, A_{42}, A_{43} = cross-sectional area of various welds available for reinforcement, sq in. (see Fig. UG-37.1)

A_5 = cross-sectional area of material added as reinforcement, sq in. (see Fig. UG-37.1)

c = corrosion allowance, in.

D = inside shell diameter, in.

D_p = outside diameter of reinforcing element, in. (actual size of reinforcing element may exceed the limits of available reinforcement established by UG-40, however, credit cannot be taken for any material outside these limits)

d = finished diameter of circular opening or finished dimension (chord length at midsurface of thickness excluding excess thickness available for reinforcement) of nonradial opening in the plane under consideration, in. [see Figs. UG-37.1 and UG-40]

E = 1 (see definitions for t and t_m)

E_1 = 1 when an opening is in the solid plate or in a Category B butt joint; or
= joint efficiency obtained from Table UW-12 when any part of the opening passes through any other welded joint.

F = correction factor which compensates for the variation in pressure stresses on different planes with respect to the axis of a vessel. A value of 1.00 shall be used for all configurations except that Fig. UG-37 may be used for integrally reinforced openings in cylindrical shells and cones.

TABLE UG-37
VALUES OF SPHERICAL RADIUS FACTOR K_1
Equivalent spherical radius = K_1D; $D/2h$ = axis ratio. For definitions, see 1-4(b). Interpolation permitted for intermediate values.

$D/2h$	. . .	3.0	2.8	2.6	2.4	2.2
K_1	. . .	1.36	1.27	1.18	1.08	0.99
$D/2h$	2.0	1.8	1.6	1.4	1.2	1.0
K_1	0.90	0.81	0.73	0.65	0.57	0.50

h = distance nozzle projects beyond the inner or outer surface of the vessel wall, in. (Extension of the nozzle beyond the inside or outside surface of the vessel wall is not limited; however, for reinforcement calculations the dimension shall not exceed the smaller of $2.5t$ or $2.5t_n$ without a reinforcing element and the smaller of $2.5t$ or $2.5t_n + t_e$ with a reinforcing element or integral compensation.)

K_1 = spherical radius factor (see definition of t_r and Table UG-37)

P = design pressure, psi (or maximum allowable working pressure for existing pressure vessels)

R = inside radius of the shell course under consideration, in.

R_n = inside radius of the nozzle under consideration, in.

S = allowable stress value as given in the applicable part of Subsection C, psi

S_n = allowable stress in nozzle, psi (see S, above)

S_v = allowable stress in vessel, psi (see S, above)

S_p = allowable stress in reinforcing element (plate), psi (see S, above)

f_r = strength reduction factor, not greater than 1.0 [see UG-41(a)]

$f_{r1} = S_n/S_v$ for nozzle wall inserted through the vessel wall

$f_{r1} = 1.0$ for nozzle wall abutting the vessel wall

$f_{r2} = S_n/S_v$

f_{r3} = (lesser of S_n or S_p)$/S_v$

$f_{r4} = S_p/S_v$

t = nominal thickness of the vessel wall, in.

t_r = required thickness, in., of a seamless shell based on the circumferential stress, or of a formed head, computed by the rules of this Division for the designated pressure, using $E = 1$, except that:

(1) when the opening and its reinforcement are entirely within the spherical portion of a torispherical head, t_r is the thickness required by 1-4(d), using $M = 1$;

(2) when the opening is in a cone, t_r is the thickness required for a seamless cone of diameter D measured where the nozzle axis pierces the inside wall of the cone;

(3) when the opening and its reinforcement are in an ellipsoidal head and are located entirely within a circle the center of which coincides with the center of the head and the diameter of which is equal to 80% of the shell diameter, t_r is the thickness required for a seamless sphere of radius K_1D, where D is the shell diameter and K_1 is given by Table UG-37.

t_n = nominal thickness of nozzle wall, irrespective of product form, in.

t_1 = weld dimensions (see UW-16 and Fig. UW-16.1)

t_2 = weld dimensions (see UW-16 and Fig. UW-16.1)

t_{rn} = required thickness of a seamless nozzle wall, in.

t_c = weld dimensions (see UW-16 and Fig. UW-16.1)

t_{min} = weld dimensions (see UW-16 and Fig. UW-16.1)

t_w = weld dimensions (see UW-16 and Fig. UW-16.1)

t_e = thickness or height of reinforcing element, in. (see UG-40, UG-41, and Fig. UG-40)

W = total load to be carried by attachment welds, lb (see UG-41)

GENERAL NOTE:
Includes consideration of these areas if $S_n / S_v < 1.0$ (both sides of ℄).

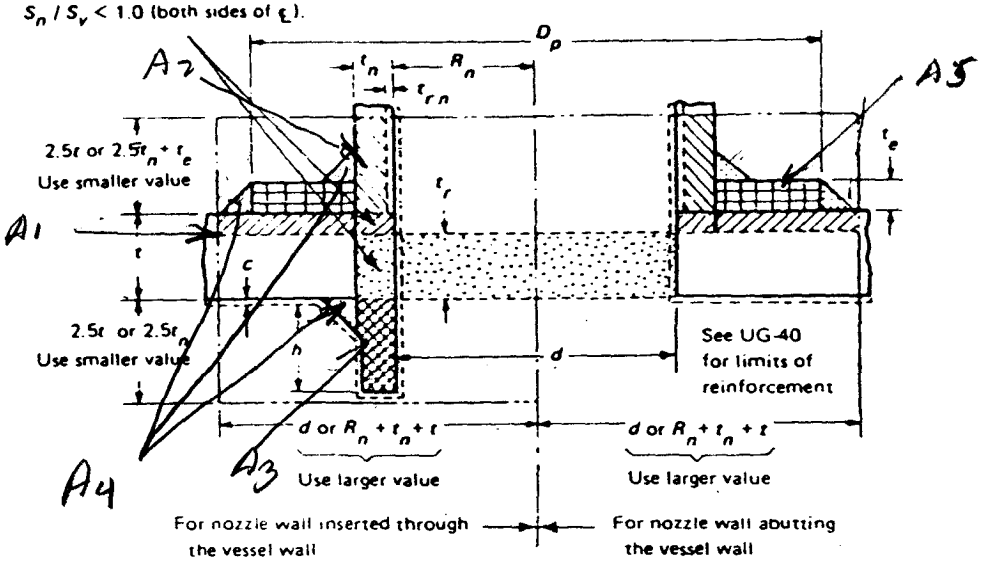

Without Reinforcing Element

$A = d t_r F + 2 t_n t_r F (1 - f_{r1})$	Area required
$A_1 = d(E_1 t - F t_r) - 2 t_n (E_1 t - F t_r)(1 - f_{r1})$ $A_1 = 2(t + t_n)(E_1 t - F t_r) - 2 t_n (E_1 t - F t_r)(1 - f_{r1})$	Area available in shell; use larger value
$A_2 = 5(t_n - t_{rn}) f_{r2} t$ $A_2 = 5(t_n - t_{rn}) f_{r2} t_n$	Area available in nozzle projecting outward; use smaller value
$A_3 = 2(t_n - c) f_{r2} h$	Area available in inward nozzle
A_{41} = outward nozzle weld = $(\text{leg})^2 f_{r2}$	Area available in outward weld
A_{43} = inward nozzle weld = $(\text{leg})^2 f_{r2}$	Area available in inward weld
If $A_1 + A_2 + A_3 + A_{41} + A_{43} > A$	Opening is adequately reinforced
If $A_1 + A_2 + A_3 + A_{41} + A_{43} < A$	Opening is not adequately reinforced so reinforcing elements must be added and/or thicknesses must be increased

With Reinforcing Element Added

A = same as A, above	Area required
A_1 = same as A_1, above	Area available
$A_2 = 5(t_n - t_{rn}) f_{r2} t$ $A_2 = 2(t_n - t_{rn})(2.5 t_n + t_e) f_{r2}$	Area available in nozzle projecting outward; use smaller area
A_3 = same as A_3, above	Area available in inward nozzle
A_{41} = outward nozzle weld = $(\text{leg})^2 f_{r3}$	Area available in outward weld
A_{42} = outer element weld = $(\text{leg})^2 f_{r4}$	Area available in outer weld
A_{43} = inward nozzle weld = $(\text{leg})^2 f_{r2}$	Area available in inward weld
$A_5 = (D_p - d - 2 t_n) t_e f_{r4}$	Area available in element
If $A_1 + A_2 + A_3 + A_{41} + A_{42} + A_{43} + A_5 > A$	Opening is adequately reinforced

A86

FIG. UG-37.1 NOMENCLATURE AND FORMULAS FOR REINFORCED OPENINGS

(This Figure Illustrates a Common Nozzle Configuration and Is Not Intended to Prohibit Other Configurations Permitted by the Code.)

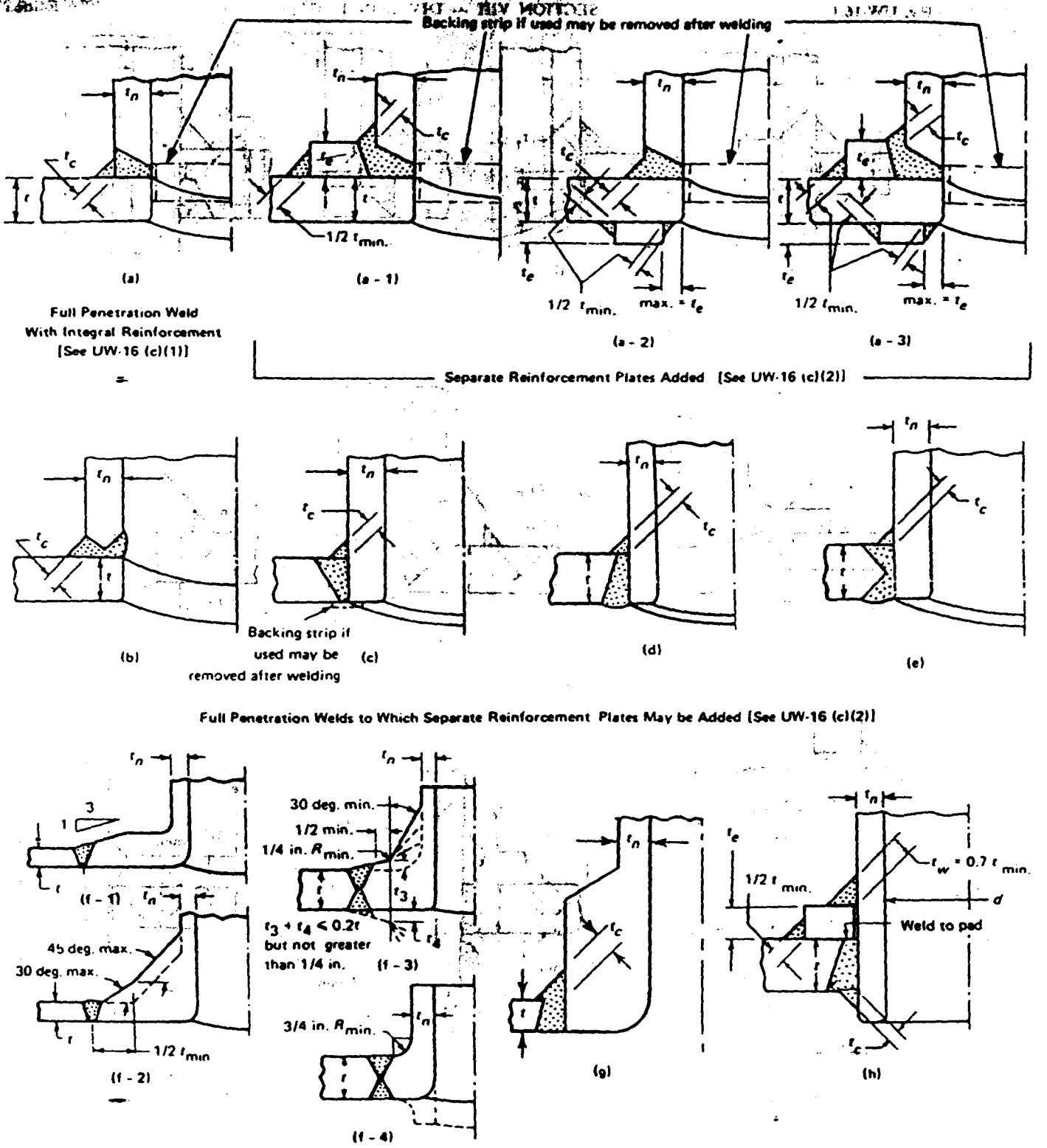

FIG. UW-16.1 SOME ACCEPTABLE TYPES OF WELDED NOZZLES AND OTHER CONNECTIONS TO SHELLS, DRUMS, AND HEADERS

NOTE: Sketches (a), (b), (c), (d), (e), (f-1) through (f-4), (g), (x-1), (y-1), and (z-1) are examples of nozzles with integral reinforcement.

UG-28 THICKNESS OF SHELLS AND TUBES UNDER EXTERNAL PRESSURE

(a) Rules for the design of shells and tubes under external pressure given in this Division are limited to cylindrical shells, with or without stiffening rings, tubes, and spherical shells. Three typical forms of cylindrical shells are shown in Fig. UG-28. Charts used in determining minimum required thicknesses of these components are given in Appendix 5.

(b) The symbols defined below are used in the procedures of this paragraph:

A = factor determined from Fig. 5-UGO-28.0 in Appendix 5 and used to enter the applicable material chart in Appendix 5. For the case of cylinders having D_o/t values less than 10, see UG-28(c)(2).

B = factor determined from the applicable material chart in Appendix 5 for maximum design metal temperature, psi [see UG-20(c)]

D_o = outside diameter of cylindrical shell course or tube, in.

E = modulus of elasticity of material at design temperature, psi. For external pressure design in accordance with this Section, the modulus of elasticity to be used shall be taken from the applicable materials chart in Appendix 5.[57] (Interpolation may be made between lines for intermediate temperatures.)

L = total length, in., of a tube between tubesheets, or design length of a vessel section, taken as the largest of the following:

(1) the distance between head-bend lines plus one-third the depth of each formed head if there are no stiffening rings (excluding conical heads and sections);

(2) the distance between cone-to-cylinder junctions for vessels with a cone or conical heads if there are no stiffening rings;

(3) the greatest center-to-center distance between any two adjacent stiffening rings;

(4) the distance from the center of the first stiffening ring to the formed head tangent line plus one-third the depth of the formed head (excluding conical heads and sections) all measured parallel to the axis of the vessel;

(5) the distance from the first stiffening ring in the cylinder to the cone-to-cylinder junction;

(6) the equivalent length of the conical heads and sections as given in UG-33(b) and (f). See 1-8 for design of the cone.

P = external design pressure, psi [see Note in UG-28(f)]

P_a = calculated value of allowable external working pressure for the assumed value of t, psi [see Note in UG-28(f)]

R_o = outside radius of spherical shell, in.

t = minimum required thickness of cylindrical shell or tube, or spherical shell, in.

t_s = nominal thickness of cylindrical shell or tube, in.

(c) Cylindrical Shells and Tubes. The required minimum thickness of a cylindrical shell or tube under external pressure, either seamless or with longitudinal butt joints, shall be determined by the following procedure.

(1) Cylinders having D_o/t values ≥ 10:

Step 1. Assume a value for t and determine the ratios L/D_o and D_o/t.

Step 2. Enter Fig. 5-UGO-28.0 in Appendix 5 at the value of L/D_o determined in Step 1. For values of L/D_o greater than 50, enter the chart at a value of $L/D_o = 50$. For values of L/D_o less than 0.05, enter the chart at a value of $L/D_o = 0.05$.

Step 3. Move horizontally to the line for the value of

[57] Note that the modulus of elasticity values listed in UF-27 of this Division shall not be used for external pressure design

D_o/t determined in Step 1. Interpolation may be made for intermediate values of D_o/t. From this point of intersection move vertically downward to determine the value of factor A.

Step 4. Using the value of A calculated in Step 3, enter the applicable material chart in Appendix 5 for the material under consideration. Move vertically to an intersection with the material/temperature line for the design temperature (see UG-20). Interpolation may be made between lines for intermediate temperatures.

In cases where the value of A falls to the right of the end of the material/temperature line, assume an intersection with the horizontal projection of the upper end of the material/temperature line. For values of A falling to the left of the material/temperature line, see Step 7.

Step 5. From the intersection obtained in Step 4, move horizontally to the right and read the value of factor B.

Step 6. Using this value of B, calculate the value of the maximum allowable external pressure P_a using the following formula:

$$P_a = \frac{4B}{3(D_o/t)}$$

Step 7. For values of A falling to the left of the applicable material/temperature line, the value of P_a can be calculated using the following formula:

$$P_a = \frac{2AE}{3(D_o/t)}$$

Step 8. Compare the calculated value of P_a obtained in Steps 6 or 7 with P. If P_a is smaller than P, select a larger value for t and repeat the design procedure until a value of P_a is obtained that is equal to or greater than P. An example illustrating the use of this procedure is given in L-3(a).

(2) Cylinders having D_o/t values < 10:

Step 1. Using the same procedure as given in UG-28(c)(1), obtain the value of B. For values of D_o/t less than 4, the value of factor A can be calculated using the following formula:

$$A = \frac{1.1}{(D_o/t)^2}$$

For values of A greater than 0.10, use a value of 0.10.

Step 2. Using the value of B obtained in Step 1, calculate a value P_{a1} using the following formula:

$$P_{a1} = \left[\frac{2.167}{(D_o/t)} - 0.0833\right] B$$

Step 3. Calculate a value P_{a2} using the following formula:

$$P_{a2} = \frac{2S}{D_o/t}\left[1 - \frac{1}{D_o/t}\right]$$

where S is the lesser of two times the maximum allowable stress value at design metal temperature, from the applicable Table in Subsection C, or 0.9 times the yield strength of the material at design temperature. Values of yield strength are obtained from the applicable external pressure chart as follows:

(a) For a given temperature curve, determine the B value that corresponds to the right hand side termination point of the curve.

(b) The yield strength is twice the B value obtained in (a) above.

Step 4. The smaller of the values of P_{a1} calculated in Step 2, or P_{a2} calculated in Step 3 shall be used for the maximum allowable external pressure P_a. Compare P_a with P. If P_a is smaller than P, select a larger value for t and repeat the design procedure until a value for P_a is obtained that is equal to or greater than P.

(d) Spherical Shells. The minimum required thickness of a spherical shell under external pressure, either seamless or of built-up construction with butt joints, shall be determined by the following procedure:

Step 1. Assume a value for t and calculate the value of factor A using the following formula:

$$A = \frac{0.125}{(R_o/t)}$$

Step 2. Using the value of A calculated in Step 1, enter the applicable material chart in Appendix 5 for the material under consideration. Move vertically to an intersection with the material/temperature line for the design temperature (see UG-20). Interpolation may be made between lines for intermediate temperatures.

In cases where the value at A falls to the right of the end of the material/temperature line, assume an intersection with the horizontal projection of the upper end of the material/temperature line. For values at A falling to the left of the material/temperature line, see Step 5.

Step 3. From the intersection obtained in Step 2, move horizontally to the right and read the value of factor B.

Step 4. Using the value of B obtained in Step 3, calculate the value of the maximum allowable external pressure P_a using the following formula:

$$P_a = \frac{B}{(R_o/t)}$$

Step 5. For values of A falling to the left of the applicable material/temperature line, the value of P_a can be calculated using the following formula:

$$P_a = \frac{0.0625E}{(R_o/t)^2}$$

Step 6. Compare P_a obtained in Steps 4 or 5 with P. If P_a is smaller than P, select a larger value for t and repeat the design procedure until a value for P_a is obtained that is equal to or greater than P. An example illustrating the use of this procedure is given in L-3(b).

(e) The design pressure or maximum allowable working pressure shall not be less than the maximum expected difference in operating pressure that may exist between the outside and the inside of the vessel at any time.

(f) Vessels intended for service under external working pressures of 15 psi or less, which are to be stamped with the Code symbol denoting compliance with the rules for external pressure, shall be designed for a maximum allowable external pressure of 15 psi or 25% more than the maximum possible external pressure, whichever is smaller.

NOTE: A vessel which is designed and constructed to Code requirements for internal pressure and which is required to be designed for an external pressure of 15 psi or less need not be designed to Code rules for the external pressure condition. However, no external pressure rating may be shown with the Code stamping unless Code requirements for external pressure are met.

(g) When there is a longitudinal lap joint in a cylindrical shell or any lap joint in a spherical shell under external pressure, the thickness of the shell shall be determined by the rules in this paragraph, except that $2P$ shall be used instead of P in the calculations for the required thickness.

(h) Circumferential joints in cylindrical shells may be of any type permitted by the Code and shall be designed for the imposed loads.

(i) Those portions of pressure chambers of vessels which are subject to a collapsing pressure and which have a shape other than that of a complete circular cylinder or formed head, and also jackets of cylindrical vessels which extend over only a portion of the circumference, shall be fully staybolted in accordance with the requirements of UG-47 through UG-50 or shall be proof tested in compliance with UG-101(p).

(j) When necessary, vessels shall be provided with stiffeners or other additional means of support to prevent overstress or large distortions under the external loadings listed in UG-22 other than pressure and temperature.

UG-29 STIFFENING RINGS FOR CYLINDRICAL SHELLS UNDER EXTERNAL PRESSURE

(a) Except as exempted in (f), the required moment of inertia of a circumferential stiffening ring shall be not less than that determined by one of the following two formulas:

$$I_s = [D_o^2 L_s(t + A_s/L_s)A]/14$$

$$I_s' = [D_o^2 L_s(t + A_s/L_s)A]/10.9$$

I_s = required moment of inertia of the stiffening ring cross section about its neutral axis parallel to the axis of the shell, in.^{4}

I_s' = required moment of inertia of the combined ring-shell cross section about its neutral axis parallel to the axis of the shell, in.^{4}

I = available moment of inertia of the stiffening ring cross section about its neutral axis parallel to the axis of the shell, in.^{4}

I' = available moment of inertia of combined ring-shell cross section about its neutral axis parallel to the axis of the shell, in.^{4} The nominal shell thickness t_s shall be used and the width of shell which is taken as contributing to the moment of inertia of the combined section shall not be greater than $1.10\sqrt{D_o t_s}$ and shall be taken as lying one-half on each side of the centroid of the ring. Portions of the shell plate shall not be considered as contributing area to more than one stiffening ring.

CAUTIONARY NOTE: Stiffening rings may be subject to lateral buckling. This should be considered in addition to the requirements for I_s and I_s' [see U-2(g)].

If the stiffeners should be so located that the maximum permissible effective shell sections overlap on either or both sides of a stiffener, the effective shell section for that stiffener shall be shortened by one-half of each overlap.

A_s = cross-sectional area of the stiffening ring, sq in.

A = factor determined from the applicable chart in Appendix 5 for the material used in the stiffening ring, corresponding to the factor B, below, and the design temperature for the shell under consideration

B = factor determined from the applicable chart in Appendix 5 for the material used for the stiffening ring, psi [see UG-20(c)]

L_s = one-half of the distance from the center line of the stiffening ring to the next line of support on one side, plus one-half of the center line distance to the next line of support on the other side of the stiffening ring, both measured parallel to the axis of the cylinder, in. A line of support is:

(1) a stiffening ring that meets the requirements of this paragraph;

(2) a circumferential connection to a jacket for a jacketed section of a cylindrical shell;

(3) a circumferential line on a head at one-third the depth of the head from the head tangent line as shown on Fig. UG-28;

(4) a cone-to-cylinder junction.

P, D_o, E, t, and t_s are as defined in UG-28(b).

The adequacy of the moment of inertia for a stiffening ring shall be determined by the following procedure.

Step 1. Assuming that the shell has been designed and D_o, L_s, and t are known, select a member to be used for the stiffening ring and determine its cross-sectional area A_s. Then calculate factor B using the following formula:

$$B = \tfrac{3}{4}\left(\frac{PD_o}{t + A_s/L_s}\right)$$

Step 2. Enter the right-hand side of the applicable material chart in Appendix 5 for the material under consideration at the value of B determined by Step 1. If different materials are used for the shell and stiffening ring, use the material chart resulting in the larger value of A in Step 4, below.

Step 3. Move horizontally to the left to the material/temperature line for the design metal temperature. For values of B falling below the left end of the material/temperature line, see Step 5.

Step 4. Move vertically to the bottom of the chart and read the value of A.

Step 5. For values of B falling below the left end of the material/temperature line for the design temperature, the value of A can be calculated using the formula $A = 2B/E$.

Step 6a. In those cases where only the stiffening ring is considered, compute the required moment of inertia from the formula for I_s given above.

Step 6b In those cases where the combined ring-shell is considered, compute the required moment of inertia from the formula for I_s' given above.

Step 7a. In those cases where only the stiffening ring is considered, determine the available moment of inertia I as given in the definitions.

Step 7b. In those cases where the combined ring-shell is considered, determine the available moment of inertia I' as given in the definitions.

NOTE: In those cases where the stiffening ring is not attached to the shell or where the stiffening ring is attached but the designer chooses to consider only the ring, Step 6a and Step 7a are considered. In those cases where the stiffening ring is attached to the shell and the combined moment of inertia is considered, Step 6b and Step 7b are considered.

Step 8. If the required moment of inertia is greater than the available moment of inertia for the section selected, for those cases where the stiffening ring is not attached or where the combined ring-shell stiffness was not considered, a new section with a larger moment of inertia must be selected; the ring must be attached to the shell and the combination shall be considered; or the ring-shell combination which was previously not considered together shall be considered together. If the required moment of inertia is greater than the available moment of inertia for those cases where the combined ring-shell was considered, a new ring section with a larger moment of inertia must be selected. In any case, when a new section is used, all of the calculations shall be repeated using the new section properties of the ring or ring-shell combination.

If the required moment of inertia is smaller than the actual moment of inertia of the ring or ring-shell combination, whichever is used, that ring section or combined section is satisfactory.

An example illustrating the use of this procedure is given in L-5.

(b) Stiffening rings shall extend completely around the circumference of the cylinder. Any joints between the ends or sections of such rings, such as shown in Fig. UG-29.1(A) and (B), and any connection between adjacent portions of a stiffening ring lying inside or outside the shell as shown in Fig. UG-29.1(C) shall be made so that the required moment of inertia of the combined ring-shell section is maintained.

(c) Stiffening rings placed on the inside of a vessel may be arranged as shown in Fig. UG-29.1(E) and (F) provided that the required moment of inertia of the ring in (E) or of the combined ring-shell section in (F)

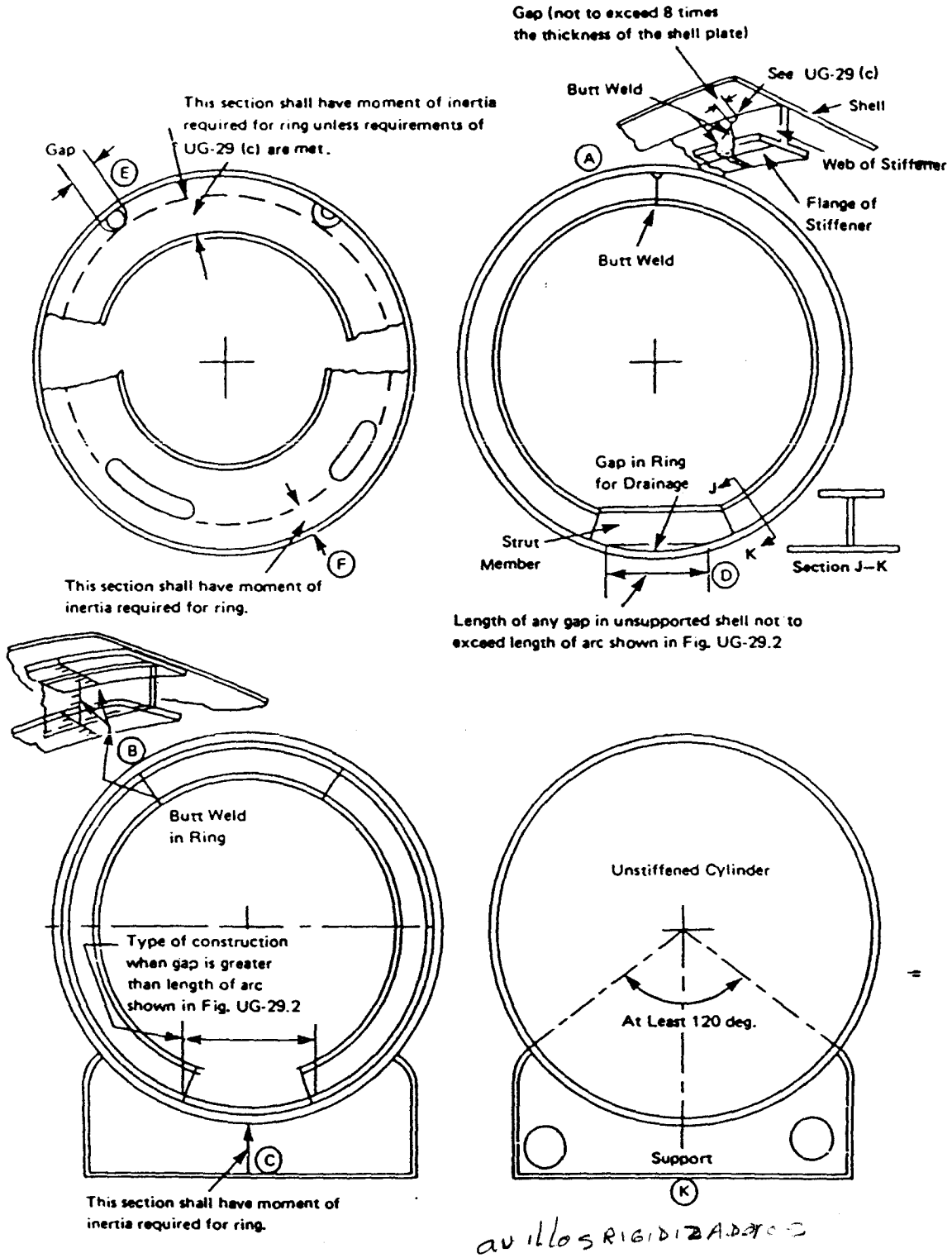

FIG. UG-29.1 VARIOUS ARRANGEMENTS OF STIFFENING RINGS FOR CYLINDRICAL VESSELS SUBJECTED TO EXTERNAL PRESSURE

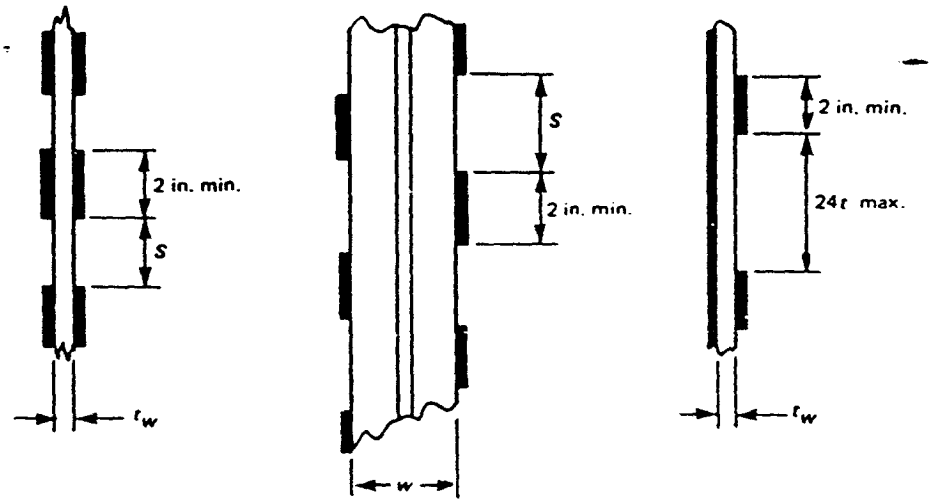

In-Line Intermittent Weld

Staggered Intermittent Weld

Continuous Fillet Weld One Side, Intermittent Other Side

$S \leq 8t$ external stiffeners
$S \leq 12t$ internal stiffeners

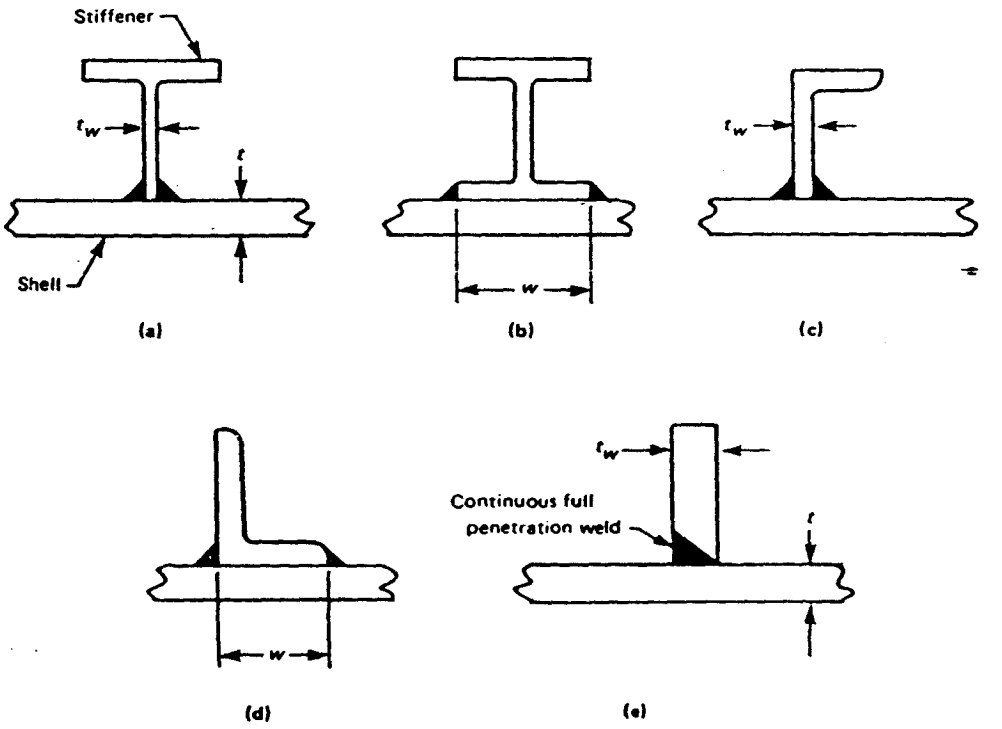

A86 FIG. UG-30 SOME ACCEPTABLE METHODS OF ATTACHING STIFFENER RINGS

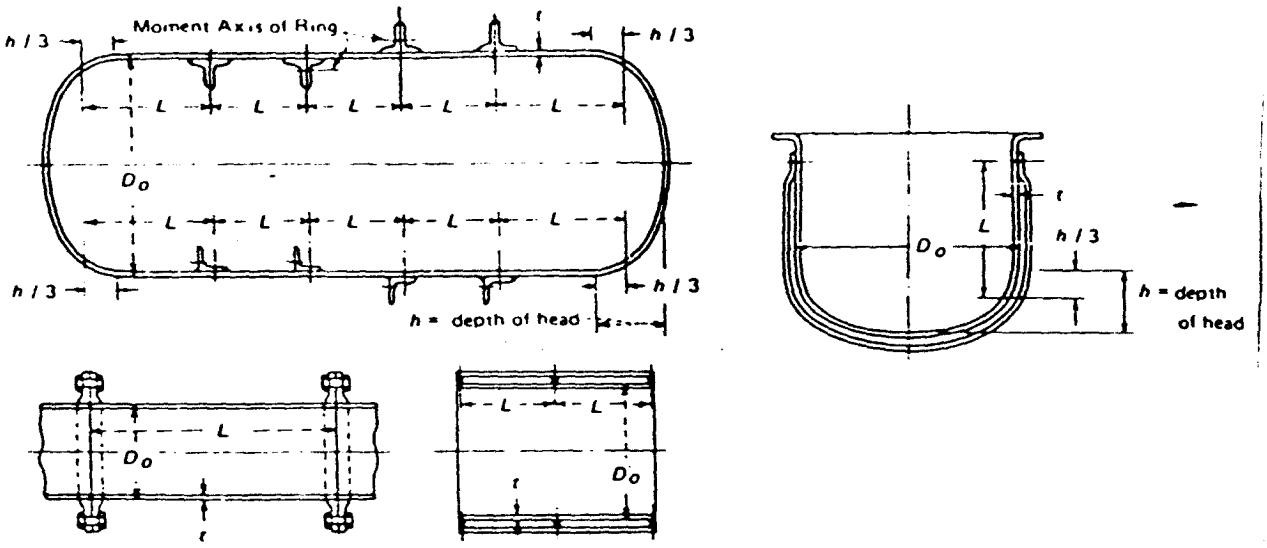

FIG. UG-28 DIAGRAMMATIC REPRESENTATION OF VARIABLES FOR DESIGN OF CYLINDRICAL VESSELS SUBJECTED TO EXTERNAL PRESSURE

CHARTS FOR DETERMINING SHELL THICKNESS OF CYLINDRICAL AND SPHERICAL VESSELS UNDER EXTERNAL PRESSURE

Fig. 5-UGO-28.0 Geometric Chart for Cylindrical Vessels Under External or Compressive Loadings (for All Materials) 519

Material Charts for Carbon or Low Alloy Steels

Fig. 5-UCS-28.1 Carbon or Low Alloy Steels (Specified Minimum Yield Strength 24,000 psi to, but Not Including, 30,000 psi) 520

Fig. 5-UCS-28.2 Carbon or Low Alloy Steels (Specified Minimum Yield Strength 30,000 psi and Over Except for Materials Within This Range Where Other Specific Charts Are Referenced) and Type 405 and Type 410 Stainless Steels 520

Fig. 5-UCS-28.3 Carbon Steel, Low Alloy Steels, or Steels With Properties Enhanced by Heat Treatment (Specified Minimum Yield Strength Over 38,000 psi for Materials Where Specific Charts Are Not Referenced) 521

Fig. 5-UCS-28.4 SA-537 521

Fig. 5-UCS-28.5 SA-508 Cl. 2 and 3, SA-533 Cl. 1 Grades A, B, and C, SA-533 Cl. 2 Grades A, B, C, and D, or SA-541 Grades 2 and 3 522

Fig. 5-UCS-28.6 SA-562 or SA-620 Carbon Steel 522

Fig. 5-UHT-28.1 Quenched and Tempered Low Alloy Steel, SA-517 All Grades, and SA-592 Grades A, E, and F Where $t \leq 2\frac{1}{2}$ in. 523

Material Charts for Nonferrous Materials

Fig. 5-UNF-28.1 Low Carbon Nickel 523

Fig. 5-UNF-28.2 Aluminum Alloy 3003 in 0 and H112 Tempers 524

Fig. 5-UNF-28.3 Aluminum Alloy 3003 in H14 Temper 525

Fig. 5-UNF-28.4 Aluminum Alloy 3004 in 0 and H112 Tempers 526

Fig. 5-UNF-28.5 Aluminum Alloy 3004 in H34 Temper 527

Fig. 5-UNF-28.6 Nickel 528

Fig. 5-UNF-28.7 Annealed Nickel–Copper Alloy 528

Fig. 5-UNF-28.8 Annealed Nickel–Chromium–Iron Alloy 529

Fig. 5-UNF-28.9 Annealed Copper, Type DHP 529

Fig. 5-UNF-28.10 Copper–Silicon Alloys A and C 530

Fig. 5-UNF-28.11 Annealed 90–10 Copper–Nickel Alloy 530

Fig. 5-UNF-28.12 Annealed 70–30 Copper–Nickel Alloy 531

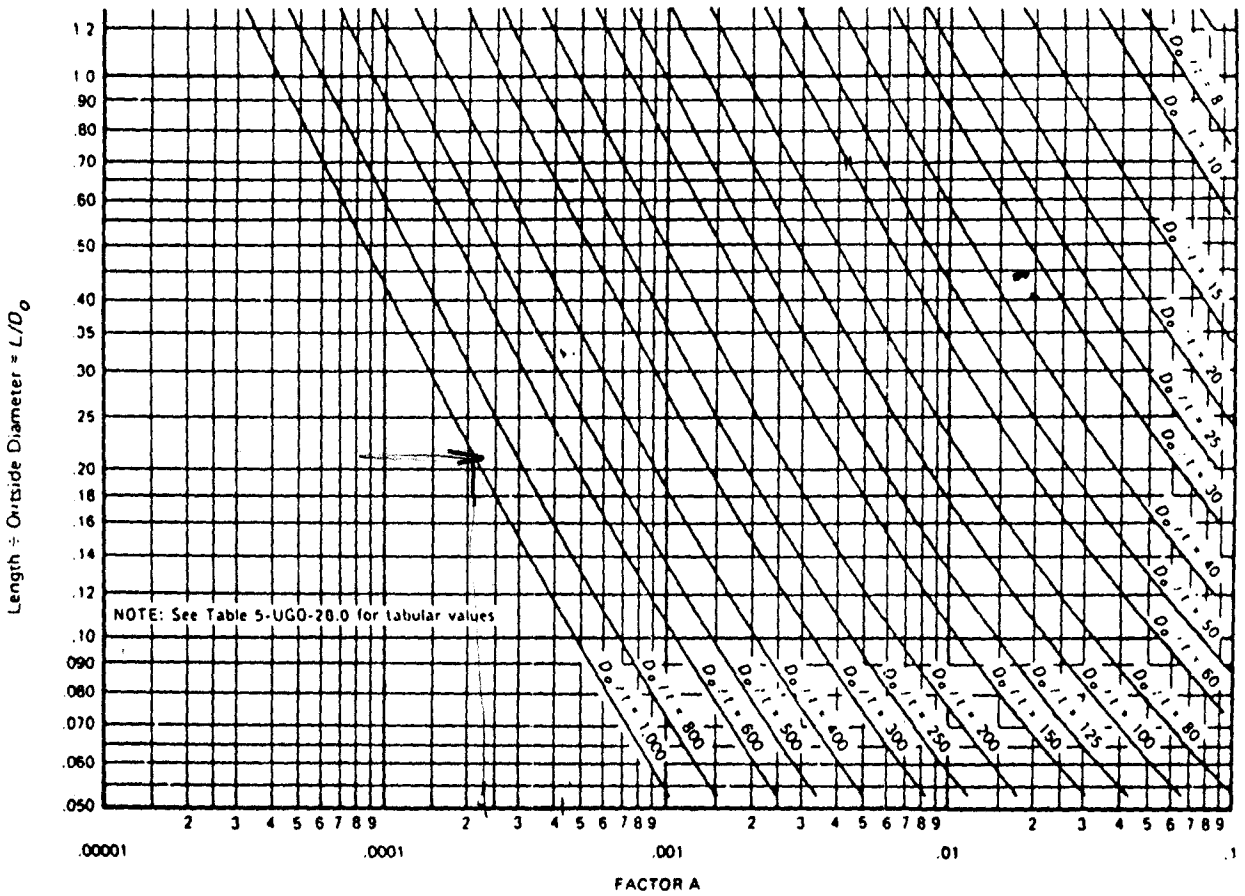

FIG. 5-UGO-28.0 GEOMETRIC CHART FOR CYLINDRICAL VESSELS UNDER EXTERNAL OR COMPRESSIVE LOADINGS (FOR ALL MATERIALS)

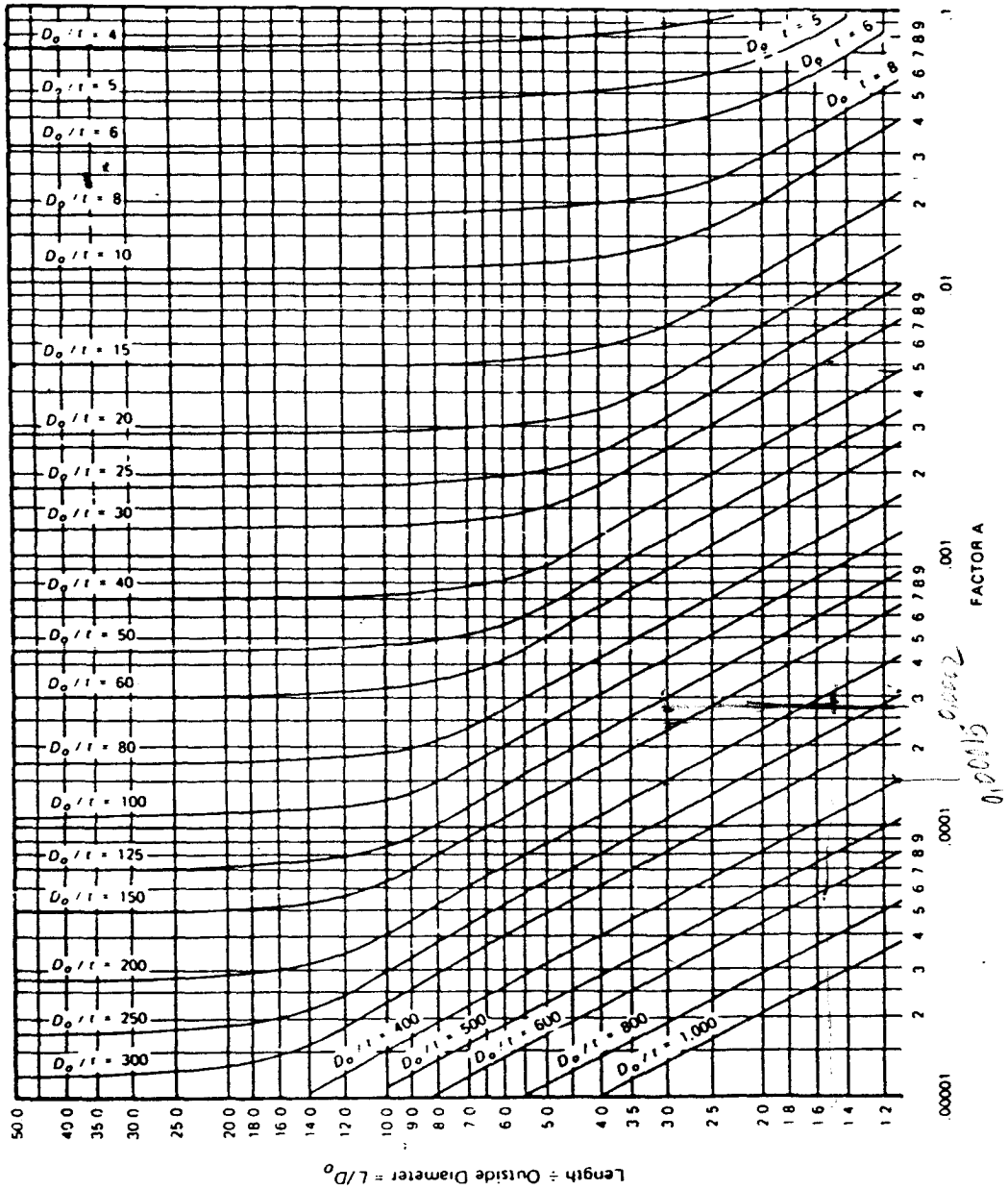
D_o/t = 4
D_o/t = 5
D_o/t = 6
D_o/t = 8
D_o/t = 10
D_o/t = 15
D_o/t = 20
D_o/t = 25
D_o/t = 30
D_o/t = 40
D_o/t = 50
D_o/t = 60
D_o/t = 80
D_o/t = 100
D_o/t = 125
D_o/t = 150
D_o/t = 200
D_o/t = 250
D_o/t = 300
D_o/t = 400
D_o/t = 500
D_o/t = 600
D_o/t = 800
D_o/t = 1,000
D_o/t = 5
D_o/t = 6
D_o/t = 8
50.0 40.0 35.0 30.0 25.0 20.0 18.0 16.0 14.0 12.0 10.0 9.0 8.0 7.0 6.0 5.0 4.0 3.5 3.0 2.5 2.0 1.8 1.6 1.4 1.2
1 .9 .8 .7 .6 .5 .4 .3 .2 .1 .09 .08 .07 .06 .05 .04 .03 .02 .01 .009 .008 .007 .006 .005 .004 .003 .002 .001 .0009 .0008 .0007 .0006 .0005 .0004 .0003 .0002 .0001 .00009 .00008 .00007 .00006 .00005 .00004 .00003 .00002 .00001
FACTOR A
Length ÷ Outside Diameter = L/D_o

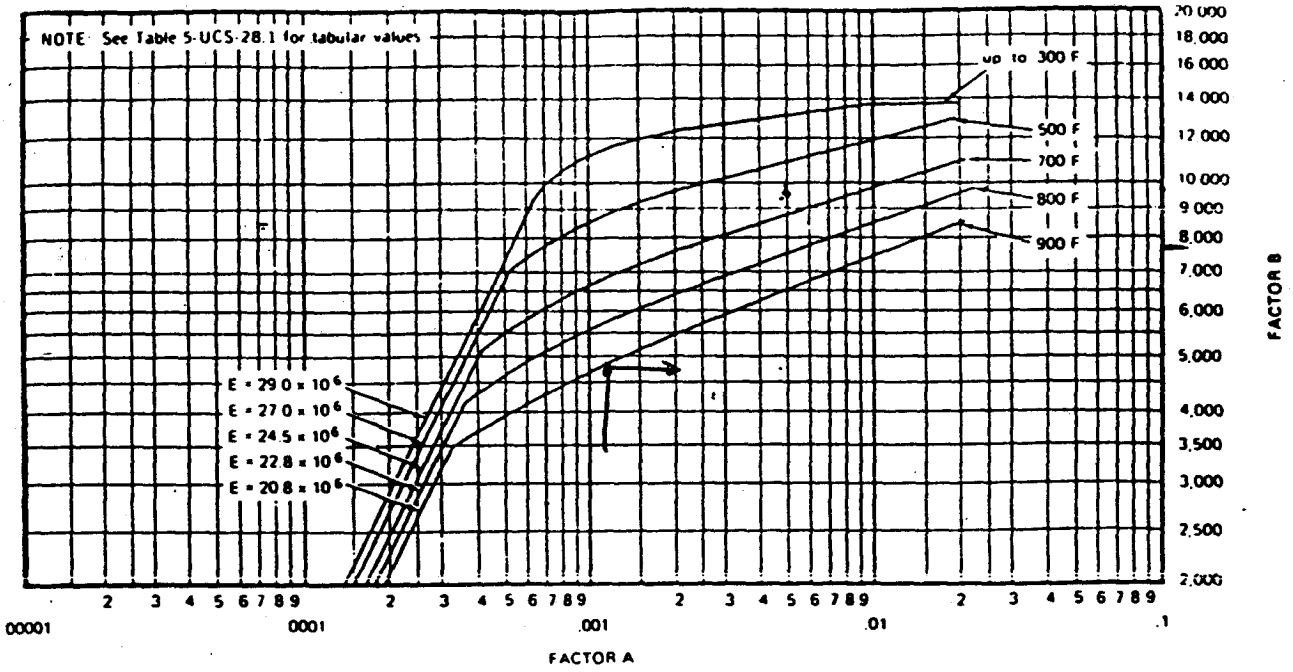

FIG. 5-UCS-28.1 CHART FOR DETERMINING SHELL THICKNESS OF CYLINDRICAL AND SPHERICAL VESSELS UNDER EXTERNAL PRESSURE WHEN CONSTRUCTED OF CARBON OR LOW ALLOY STEELS (SPECIFIED MINIMUM YIELD STRENGTH 24,000 psi TO, BUT NOT INCLUDING, 30,000 psi) [NOTE (1)]

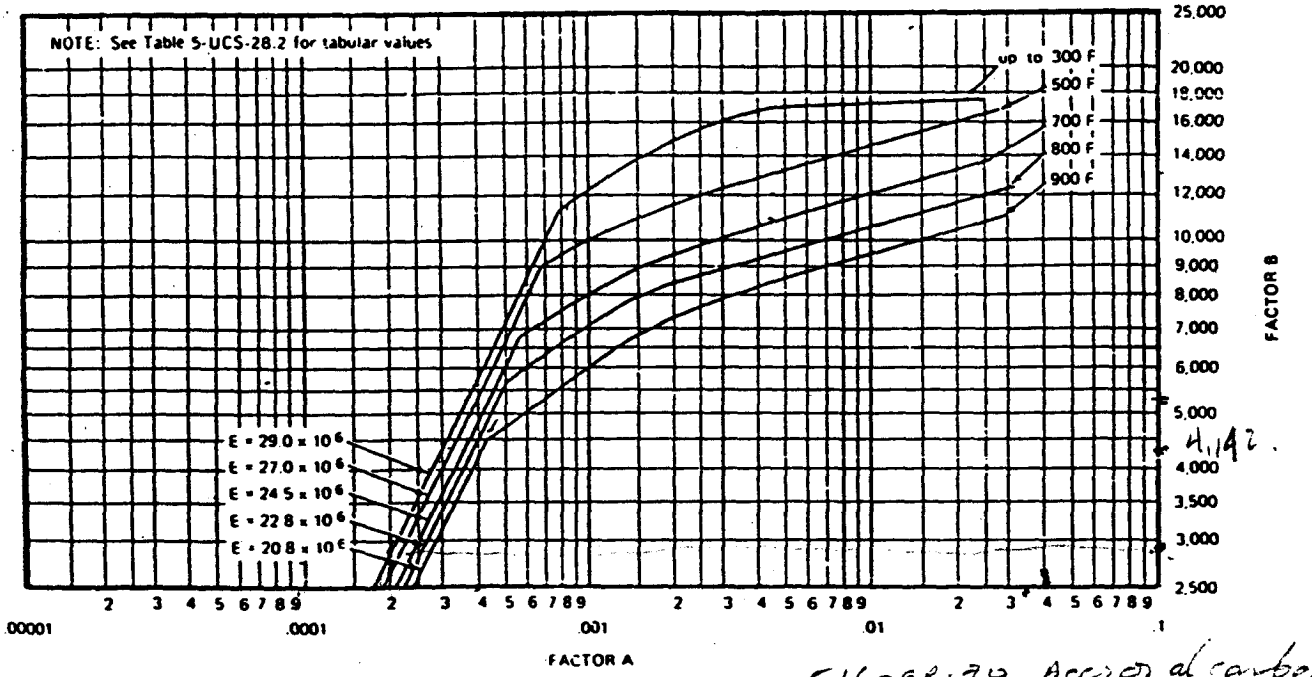

516-GR-70 Accros al carbon

FIG. 5-UCS-28.2 CHART FOR DETERMINING SHELL THICKNESS OF CYLINDRICAL AND SPHERICAL VESSELS UNDER EXTERNAL PRESSURE WHEN CONSTRUCTED OF CARBON OR LOW ALLOY STEELS (SPECIFIED MINIMUM YIELD STRENGTH 30,000 psi AND OVER EXCEPT FOR MATERIALS WITHIN THIS RANGE WHERE OTHER SPECIFIC CHARTS ARE REFERENCED) AND TYPE 405 AND TYPE 410 STAINLESS STEELS [NOTE (2)]

sd... no toca la curva usamos
usamos $P_A = 2AE/3\,(D_o/t)$
$2 \times 0.0001\ 5 \times 29 \times 10^6$

FORM.1

THICKNESS VESSELS UNDER INTERNAL PRESSURE
CALCULATIONS ACCORDING TO ASME CODE SECT. VIII DIV.1.
CILINDRICAL SHELL UG-27 (C)(2)

ITEM:
TAG:
P= PRESSURE DESIGN (PSI)
T= TEMPERAT DESIGN (°F)
M= MATERIAL
H= STATIC HEAD (PSI)
E= JOINT EFFICENCY
S= ALLW.STRESS.(PSI)
C= CORROSION ALLOW (IN)
DO= OUTSIDE DIAMETER (IN)
RO= OUTSIDE RADIUS (IN)
T= MINIMUM REQUIRED THICKNESS (IN)

$T = (P \times RO / SE + 0.4P) +$ CORROSION
(SEE.APPENDIX 1. 1-1(a)(1))
ID= INSIDE DIAMETER (IN)
RI= INSIDE RADIUS (IN)
T= MINIMUM REQUIRED THICKNESS(IN)
$T = (P \times RI / SE + 0.6P) +$ CORROSION./
RI= D/2+C
TN= NOMINAL THICKNESS(IN)
$RI_c = RI + C$.

SA-516 GR-50

P	T	M	H	E	S	C	DO	RO	ID	RI (RI-C)	T	TN	NOTES
50	223	SA-516 GR-70		.85	17.5	1/8			51.13	25.71	0.211	3/8	

FORM.2

THICKNESS ELLIPTICAL HEADS
APPENDIX 1-4 (C)

P= PRESSURE DESIGN (PSI)
T= TEMPERAT DESIGN (°F)
M= MATERIAL
C= CORROSION ALLOW (IN)
H= STATIC HEAD (PSI)
E= JOINT EFFECENCY
S= ALLW.STRESS.(PSI)
D= INSIDE DIAMETRE (IN)
K= FACTOR/DEPEN.PROPORTION D/2h
SEE TABLE.1-4.1.

t= MINIMUM REQUIPED THICKNESS OF HEAD AFTER FORMING (IN)

$t = (PDK/2SE - 0.2P) + C$:

P	T	M	C	H	E	S	D	K	t	NOTES	$\frac{D}{2h}$
50	223	SA-516 Gr-70	.125		0.85	17,5	51,13	1	0.210	Usar (3/8") 0,375	2

FORM.3

THICKNESS VESSELS UNDER INTERNAL CALCULATIONS ACCORDING TO ASME CODE SECT. VIII DIV.1. TORISRHERICAL HEADS APP. 1-4(d)

P= PRESSURE DESIGN (PSI)
T= TEMPERAT DESIGN (°F)
M= MATERIAL
C= CORROSION ALLOW (IN)
H= STATIC HEAD (PSI)
E= JOINT EFFECENCY
S= ALLW.STRESS.
ID= INSIDE DIAMETER (IN)
RI= INSIDE RADIUS (IN)

L= CROWN RADIUS (IN)
r= KNUCKLE RADIUS (IN)
M= COEFFICIENTS.
$M = 1/4(3+\sqrt{L/r})$
T= MINIMUM REQUIRED THICKNESS(IN)
T= PLM/2SE-0.2P
TNW= NEW.THICKNESS
TNW= T+0.138.(IN)

Factor de reduc de la mag rebordeadora

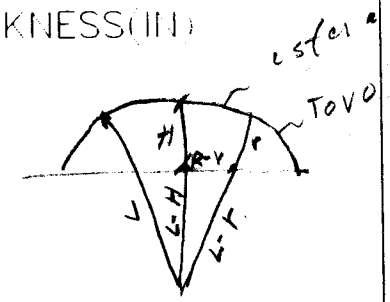

P	T	M	C	H	E	S	ID	RI	L	r	M	T	TNM	NOTES TNM+C
50	22.3	SA-316 GR-70	1/8	11.36	.85	17.5	51.13	25.71	42,2	3.11	1.47	0,104	0,244	0.367

T comercial es mayor de 3/2

Pag 468

FORM.4

UG-32 W. RADIO Largo = Ø ext del cabezal
Radio corto es igual al 6% del radio largo

TORISPHERICAL HEADS

entonces el espesor mínimo es

$$T = \frac{0.885 \cdot P L}{SE - 0.1P}$$

UG-32 (J)

ID= INSIDE DIAMETER.SHELL
RI= INSIDE RADIUS.SHELL
r= KNUCKLE RADIUS (IN)
r ≥ ID/10
H= HEIGNT.HEADS.
H= ID/4.5

KNUCKEL RADIUS.

50 80 100
150 200 250
300 350 400
500

$$L = H + R - 2Rr / 2(H - r)$$

en mm

L = 0,0 (Ø OD cabezal)
r = 0,06 × L

MAX L = 0,D (D. ext. del cab.)
MIN r = 6% OD pero no menor a 3 veces el espesor del cabezal

chequeamos en UG-32W(e) si no se cumple varios al Apendice 1-4 (D)

$$T = PLM / SE - 0,2P$$

formato 3

TAG	ITEM	ID	RI	r	H	L	NOTES
		51,13 1298,7"	25,71 653,03"	5,11 129,8"	11,36 288,54	1072,4	

FORM.5

MAXIMUM ALLOWABLE WORKING PRESSURE CYLINDRICAL SHELL.

P= PRESSURE DESIGN (PSI)
T= TEPERAT DESIGN (OF)
M= MATERIAL
C= CORROSION ALLOW (IN)
H= STATIC HEAD (PSI)
E= JOINT EFFICENCY
S= ALLW. STRESS.
TN= NOMINAL THICKNESS (IN)
RI= INSIDE RADIUS (IN)
OD= OUTSIDE DIAMETER (IN)
RO= OUTSIDE RADIUS (IN)

MAWP= MAXIMUM ALLOW.WORKING PRESSURE

CORRODED.

MAWP= SE (TN−C)/RO−0.4(TN−C) − H (PS16)

(ID)

MAWP= [SE (TN−C)/((RI+C)+0.6(TN−C))] − H(PS16)

NEW.

MAWP= SETN/RO+0.4TN + H

MAWP= SETN/RI+0.6TN − H

P	T	M	C	H	E	S	TN	ID	RI	OD	RO	MAWP	NOTES
60	223	SA-516 GV-70	1/8		0.85	17,500	3/8 .375	51.	25.5	52.16	26.08	144.27	corroid
												216.8	New

FORM.6

MAXIMUM ALLOWABLE WORKING PRESSURE.
ANSI FLANGES (REF. ASME VIII DIV.1. PAR. UG-44

M= MATERIAL
G= GRUPO. (SEC ANSI B16.5)
T= TEMPERAT DESIGN (°F).
A-C= ANSI CLASS.
P= DESIGN PRESSURE (PS16)

WAMP= MAXIMUN ALLOW.
WORKING PRESS.(PS16)
IF MAWP>P THE SELETED IS SASTIFATORY.

ansi B 16.5 ✓ ansi B 16.5 ?

ITEM	TAG	MATERIAL	G	T	A-C	P	NOTES
TCCN	TCCN	SA-105-B	1.1	222,8	150 #	50	MAWP = 245 PSI 260

Apendice 1, 4

FORM.7

MAXIMUN ALLOWABLE WORKING PRESSURE HEAD ELIPSOIDAL 2:1

T= TEPERAT DESIGN (OF)
M= MATERIAL
C= CORROSION ALLOW (IN)
H= STATIC HEAD (PSI)
E= JOINT EFFICENCY
S= ALLOW - STRESS.
TN= NOMINAL THICKNESS (IN)
D= INSIDE DIAMETRE (IN)

L= CROWN RADIUS (IN)
MAWP= MAXIMUN ALLOW.WORKING PRESSURE(PSI)

CORRODED:

$$MAWP = \frac{2SE(TN-C)}{(D+2C)+0.2(TN-C)}$$

NEW:

$$MAWP = 2SETN/D+0.2TN.$$

T	M	C	H	E	S	TN	D	MAWP CORP.	MAWP NW.	OBS.
50	223	.125	0	0.85	17.500	3/8 .375	51.13	144,98	217.87	

FORM.8

MAWP NW / CORROIDO

ejemplo del profesor.

COMPONENT	PSI (CORRS)	PSI (NEW)
SHELL	144.27 (146.4)	216.8 Psi
HEAD	144.98 (145)	217.87 (218.4) Psi
ANSI.FLANGES.	260	260 Psi

COMPONENT–LIMIT: _____

corroD 145 (Head)
NeW 216.8 (SHell)

UG-22

FORM.9

CUELLO DE CONECCIONES.DETERMINACION DE ESPESORES.

ANSI 36.10 (DIA: EXT) ejo N1=10" Dext - 10.75
ESF. PERMISIBLE DEL MATDE BOQUILLA
T1 = (145x 5.375)/15000 + 0.4(145) + 0.125"
S = 15,000 PSI
T1 = 0.1777

T1= UG-45 (a)/T1= (PRO/SE+0.4P) + CORROSION

T2= UG-45 (b)(1),(b)(2),or (B)(3)/T2= ESPESOR RECIPIENTE NUEVO

T = (STD - 0.125 ST) = 0.875 ST.

T3= UG-45 (b)(4)/T3= (ESP.STD TUBO) 0.875 + CORROSION → incluye Tolerancia de Fabricacion

Tmin= EL MAYOR DE T1 Y (EL MENOR DE T2 Y T3

Tmin)*= Tmin MAS TOLERANCIA DE FABRICACION PARA TUBO Y TUBERIA [UG-16(d)].

Tmin)*= Tmin/0.875.

Tmin/.875

Para Boquilla y BRIDA

M.K	DIAM	SERVICIO	POSICION	(PSI) PRESION	CORRO-SION	MATERIAL	T1	T2	T3	Tmin	Tmin)*	SHC.min. (ANSI)	ESPESOR A USAR
N1	10"	ENTRADA GAS	SHCLL	145 (MAW)	1/8 (.125)	SA-106-GR.B	0.177	3/8 .375	.444	.375	0.4285	0.5. SCH X S	0.5
N4	20"	BOCA DE VISITA											
N9	2"	ENTRADA DE AGUA											
N12	2"	ENTRADA DE LIQ											
N3	4"	SALIDA GAS	HEAD										
N5	4	VALVULA DE ALIVIO											

F = fig UG-37

FORM.10

REFUERZO DE CONEXION

F = 1.0 ; FRL = FR2 = FR3 ; FR4 = 1.0

NUMERO DE OBRA	CLIENTE:	ITEM:
BOQUILLA N1	TAMAÑO DE TUBO 10 "	UBICACION shell

DATOS		SB	VALOR
PRESION DE DISEÑO (MAW)		P	145
TEMP. DE DISEÑO		T	222,8
SN / SV (MAX.100)		fr1	0,85
1 - FRI		F2	
ESFUERZO ADMISIBLE	BOQUILLA	SN	15.000
	RECIPIENTE ESP= REFUERZO	SV	17,500
EFIC. DE JUNTA (UG-40)		E1	1.0
CORROSION ADMISIBLE		C	0.125
ESP NOM.DE RECIPIENTE-C		T	0.125
ESP.NOM.DE CUELLO.BOQ-C		TN	0.250
RADIO INT DE BOQ.+C		RN	5.5
			25.71
ESP R REFUERZO		TP	
ANCHO R REFUERZO		W	

CARGAS EXT.APLICADAS: SERV.ESPECIAL[UG-120(d)]=

EXAMEN SI ☐ E=1

RADIOGRAFICO NO ☐ E=0.8

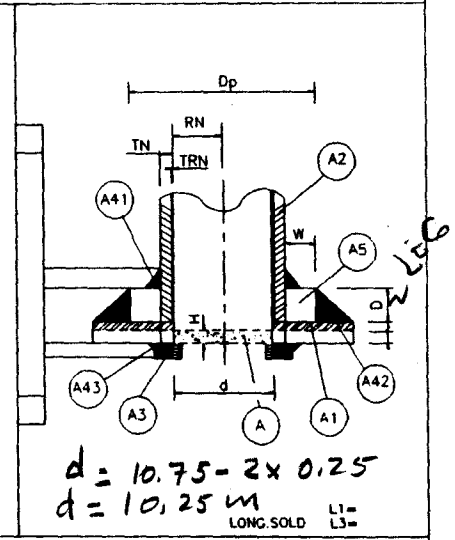

d = 10.75 - 2x 0.25

d = 10,25 in LONG.SOLD L1= L3=

ESP REQ EN LA PARED DEL RECIPIENTE: [UG-27(c)(1)]

$$TR = \frac{PR}{SE-0.6P} = \frac{145 \times 25,71}{17500 \times 1 - 0.6 \times 145} = 0,214$$

ESPESOR REQ EN LA PARED DE LA BOQUILLA

$$TRN = \frac{PRN}{SN\ E - 0,6\ P} = \frac{145 \times 5,5}{15.000 \times 1 - (0,6 \times 145)} = 0,053''$$

AREA REQ DE REFUERZO

A = dtrf + 2TN Tr F(1-fr1) / A = 10,25 x 0,214 + 2 x 0,25 x 0,214 (1 - 0,85)

A = 2,2 IN²

d = diametro corroido / Tr = esp. req. pared.

AREA DISPONIBLE COMO REFUERZO / UN CONSIDERAR REFUERZO

PARED DE RECIPIENTE (VALOR MAYOR)

$$A1 \begin{cases} d(E1t - Ftr) - 2TN\ (E1T - FTr)(1 - fr1) = 0,3663 in^2 \\ 2(Tr\ TN)(E1T - Ftr)(1 - Fr1) - 2TN\ (E1T - FTR) \end{cases}$$

= 0,0333 IN²

PROYECCION EXT.DE PARED DE BOQUILLA(VALOR MENOR)

$$A2 \begin{cases} 5T\ (TN - TRN)FR2T = \\ = 0.0615\ in \\ 5\ (TN - TRN)\ FR2TN \end{cases}$$

= 0.246 IN²

PROYECCION INTERNA DE PARED DE BOQUILLA(VALOR MENOR)

A3= 2 (TN)FR2h= 0

altura del angulo de filete

SLODADURAS CON REFUERZO:

A41,A42,A43 / A41=(tE G)² fr2 = 0,14 in²

SIN REFUERZO:

A41,A43 VER FIG.UG-37.1

PLANCHA DE REFUERZO=

A5=(Dp-d-2TN)Tp FR4

A5 = 2 WTP =

A TOTAL = A1 + A2 + A3 + A4 + A5

A TOTAL SIN REF = 0,3663 + 0,246 + 0,14 = 0,7523 in²

FORM. 11

COMPARACION DE ESFUERZO A TRAVES DE LOS CAMINOS CRITICOS DE LA JUNTA SOLDADA, UG-41

Boquilla = U1
DIA-NOM = 10"
TN = 0,25 "
TR = (3/8"

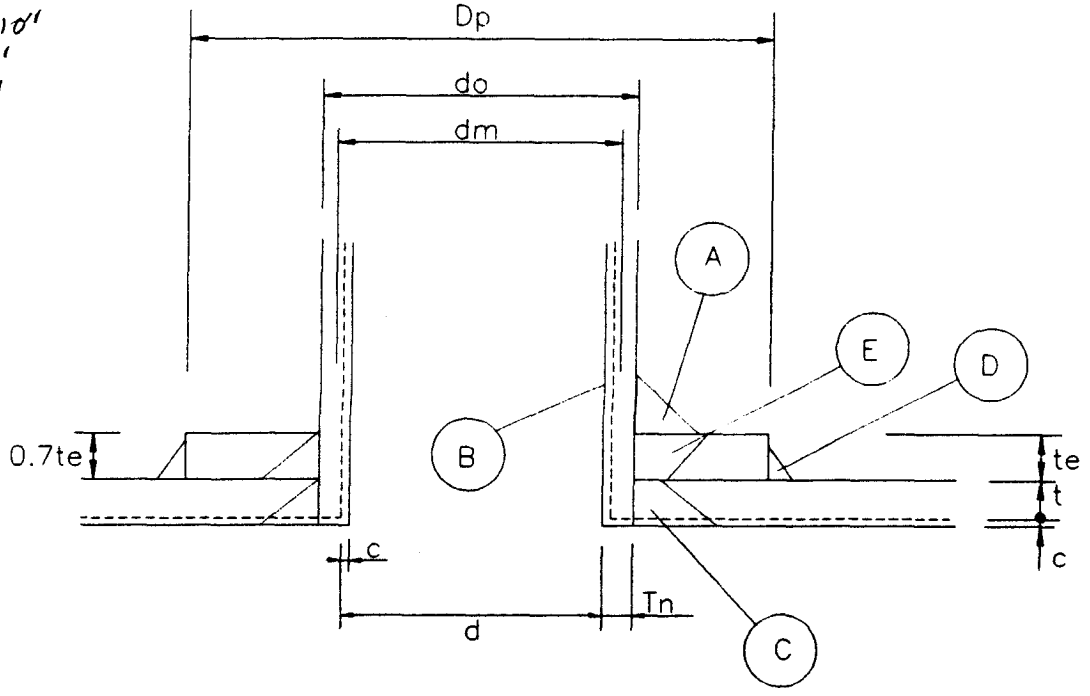

DIAMETRO EXTERNO DE LA BOQUILLA do= 10,75 in
DIAMETRO MEDIO DE LA BOQUILLA =do-tn=dm= 10.5 in
DIAMETRO EXTERNO DEL ELEMENTO DE REFUERZO=
do+2w=Dp= 10,75 + (2 x 3") = 16,75"
Sy = S = Esfuerzo PERMISIBLE DEL RECIPIENTE = 17.500 PSI
Sy1 = Esfuerzo PERMISIBLE DE LA Boquilla = 15.000 PSI

CARGA A SER SOPORTADA POR LAS SOLDADURAS

$W=[A-(d-2TN)(E1t-Ftr)]S$ (17500)

d = diametro corroido = 10,25 in
W = [2,2 - (10,25 - 2x0,25)(0,25 - 0,214)]S
W = 32.357,5 Lbs

(0,978+225+0,0625+0,140) 17500

W1-1 = (A2+A5+A41+A42)S = 60033. Lb
W2-2 = (A2+~~A3~~+A41+~~A43~~+2tnt fr1)S = 38605 (No hay proyección de la Boquilla)
W3-3 = (A2+~~A3~~+A5+A41+A42+~~A43~~+ 2tnt fr1)S = 62221,25 Lbs

ESFUERZOS UNITARIOS:

CORTE EN LA SOLDADURA DE FILETE	S1=0,49	SV= 8,575 PSI
TENSION EN LA SOLDADURA EN RANURA	S2=0,74	SV= 12,950 PSI
CORTE ENLA PARED DE LA BOQUILLA	S3=0,70	SV= 10,500 PSI

Para cada Boquilla

FUERZA DE LLOS ELEMENTOS DE UNION

(A) FILETE SUPERIOR (SOLDADURA DE CUBIERTA)

LEG = (3/8)" FA=1,57 doxLegxS1 = 1.57x10.75x0.375x8575
FA = 54771.7 Lbs.

(B) PARED DE BOQUILLA

FB=1,57 dmxtnxS3 = 1.57x10.5x0.25x10500 =
FB = 43273 Lbs

(C) SOLDADURA EN LA RANURA INTERIOR

FC=1,57 doxtxS2 = Fc= 54641 Lbs

(D)SOLDADURA DE FILETE MAS LEJANO
(ELEMTO DE REFUERZO)

FD=1,57xDp(0.7te)S1 = FD=59194. Lbs

(E)SOLDADURA EN LA RANURA SUPERIOR

FE=1,57xdoxtexS2 = 81961Lbs

POSIBLES RUTAS DE FALLA:

1)A TRAVES DE (B) Y (D) : FB + FD = 102.467 Lbs

2)A TRAVES DE (C) Y (D) : FC + FD = 113835 Lbs

3)A TRAVES DE (A),(C) Y (E) : FA + FC +FE = 190837 Lb

RESUMEN DE FALLA

RUTA-1 = 102467 > W = 32357,54 W1-1 = 60033 Lbs
RUTA-2 = 113835 > W y W2-2 = 38605 Lbs
RUTA-3 = 190837 > W y W3-3 = 62221 Lbs
EL Diseño es satisfactorio

Diseño Bajo carga externa

FORM.12

THICKNESS VESSELS UNDER EXTERNAL
REF: ASME VIII DIV.1. PAR UG-28
WHEN. DO/t > 10

ITEM:
TAG:

MAT= MATERIAL
T= DESIGN TEMPERATURE (°F)
P= EXTERNAL DESING PRESSURE (PSI)
C= CORROSION ALWANCE (IN)
DO= OUTSIDE DIAMETER (IN)
L= DESIGN LENGTH (IN)
T1= ASSUMED THICKNESS (IN)
L/DO= COEFFICIENT.
IF L/DO < 0.05 L/DO= 0.05
IF L/DO>50 L/DO= 50
DO/T1= COEFFICIENT

A= COEFFICIENTS EVALUATED FIG.5-UGO-28.0
B= COEFFICIENTS AVULUATED TABLE 5-UCS-28.2
PA= MAXIMUM ALLOWABLE EXTERNAL WOPKING PRESSURE (PSI)
PA= 4b/3(do/t) IF PA>P: T1 IS ADEQUATE
T= DESING THICKNESS (IN)
T= T1 + C

$P_a = 2AE/3(Do/t) = \frac{2 \times 0.00015 \times 29 \times 10^6}{3(207)}$

P_a = 14 PSI < P = 15 PSI
RIGIDIZAR EL TANQUE

	MAT	T	P F.V.	C	DO	L	T1	L/DO	DO/T1	A	B	PA	t	NOTES
NEW	SA-516 GR70	222	15	0.125	51.75	153	0.375	3	138	.00072	2000	28		
CORR.						153	0.25	3	207	.00015		14 (1)		
DISMINUIR LONG L USANDO 1 ANILLO RIGIDIZADOR						76.5"	0.25"	1.47	207	0.00023	4142	26.87	3/8"	OSEA UN ANILLO RIGIDIZADOR

FORM.13

FORMED HEADS,PRESSURE ON CONVEX.SIDE
REF:ASME VIII DIV.1. PAR.UG-33

T= HEAD THICKNESS.(ASSUME).IN.
DO= OUTSIDE DIAMETER.IN
MAT= MATERIAL
T= DESING TEMPERATURE.(°F)
P= EXTENAL DESING PRESSURE. (PS16)
RO= OUTSIDE RADIUS.IN
FOR:-2:1 ELLPSOIDAL HEAD
RO= 0.9 DO
-TORISPHERICAL HEAD.
RO= CROWN RADIUS (IN)

A= FACTQR A
A= 0.125/RO/T
B= COEFFICIENTS EVALUATED.Fig.5-VCS-28.2
PA= MAXIMUM ALLOWABLE EXTERNAL WORKING PRESSURE. PSI
PA= B/(RO/T)
IF PA >P THE ASSUMED THICKNESS IS SATIFACTORY.

T	DO	MAT	T	P	RO	A	B	PA	NOTES

FORM.14

CONICAL–SECTON. EXTERNAL PRESURE.
REF:ASME VIII DIV.1. PAR. V6–33 (F)(L)

L= LECNGTH OF CONE IN.

LE= EQUIVQLENT LENGTH OF CONICAL SECTION IN

LE= (L/2)(1+DE/DI)

TE= EFFECTIVE THICKNESS.IN

TE= Tx Cos α

A= FACTOR DETREMINED FROM FIG. UG–28.0(PAG 40)

B= FACTOR DETERMINED FROM FIG (pag 41–45).

PA= MAXIMUN AVOWABLE WORKING. PRESSURE. PSI.

α = ANGLE.CONICAL SECTION.

DI= OUTSIDE DIAMETER AT THE LARGE. IN

DS= OUTSIDE DIAMETER AT THE SMALL. IN

T= MINIMOM REQUIERED THICKNESS. IN

NOTE:

WHEN $\alpha \leq 60°$ AND DI/TE $\geq$ 10

PA= 4B/3(DI/TE)

IF PA>P THE ASSUMED THICKNESS IS SATIFACTORY.

α	DI	DS	L	LC	TE	A	B	PA	T	P	NOTES

STIFFENING RINGS FOR CILINDRICAL SHELL UNDER EXTERNAL PRESERE

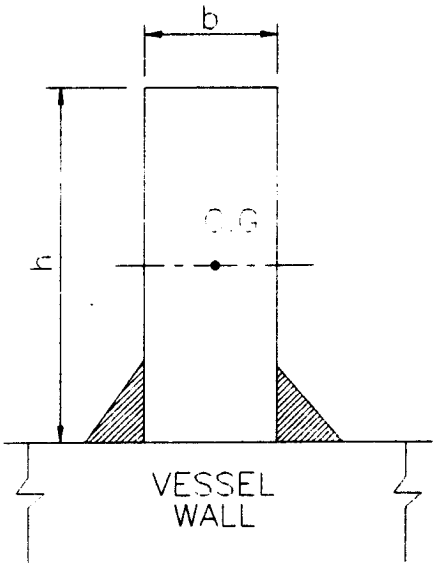

$I_{x-x} = bH^3/12$; b= ;h=

I_{x-x}=

$I_S = [D_o\ L_s(t+A_s-L_s)A]/14$

EXTERNAL DIAMETER: D_o=

DESIGN LENGIIT(Ls): Ls=

MINIMUN REQUIRED THICK-SHELL: t=

STIFFENING RING AREA(bxh) As=

B= 3/4(PDO/t+As/Ls)=

A=

I_S= $< I_{x-x}$

DWG. NO. CVS - 141

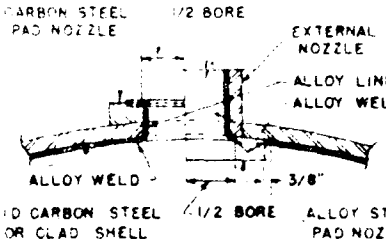

EXTERNAL INTERNAL

PAD TYPE NOZZLES

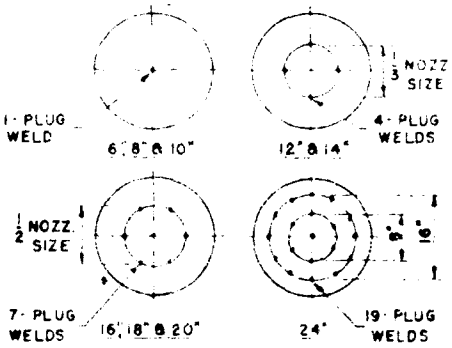

PLUG WELD DETAILS FOR BLIND FLANGE ALLOY DISC

ALL PLUG WELDS 3/4" ϕ, NONE REQ'D UNDER 6"



TYPICAL ARC WELDED SHELL & HEAD LINER

DESIGN TEMP °F	MAX WIDTH OF STRIP	SPACING FOR PLUG WELDS
0 - 750	4 1/2"	4"
751 - 850	4"	3 1/2"
851 - 950	3 1/2"	3"
951 - 1000	3"	2 1/2"



METHOD OF WELDING BUTT SEAMS IN LINER

BACK CHIP & WELD WITH CARBON STEEL GRIND OR CHIP SMOOTH

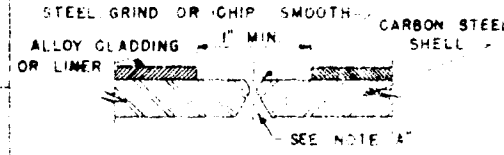

DETAIL OF SHELL & HEAD SEAMS

CUT BACK CLADDING (OR LINER) MIN OF 1/2" EITHER SIDE OF WELD LINE PRIOR TO MAKING CARBON STEEL WELD. FILL IN GAP WITH LINER STRIPS OR ALLOY DEPOSIT (ALLOY DEPOSIT ONLY FOR CLADDING), TO MIN THICKNESS OF LINER, AFTER RADIOGRAPHING (IF REQUIRED)

LINING MATERIAL AISI TYPE NO.	ELECTRODE TYPE FOR ALLOY TO ALLOY WELDS	ELECTRODE TYPE FOR ALLOY TO CARBON ST WELDS
304	308	309 OR 310
316	316	310 MO
317	317	310 MO
347	347	309 Cb OR 310 Cb
405	309 OR 310	309 OR 310
MONEL	MONEL	NICKEL
NICKEL	NICKEL	NICKEL
INCONEL	INCONEL	INCONEL

I.D AS INDICATED ON VESSEL DRAWING

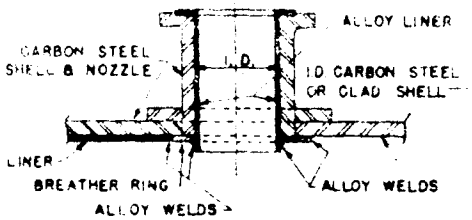

LINED VESSEL UNLINED OR CLAD VESSEL

EXTERNAL NOZZLE

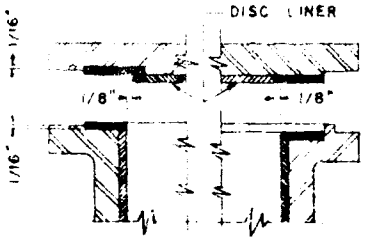

RAISED FACE 150# & 300# (400# & 600# R.F. SIMILAR TO MALE COVER)

MALE & FEMALE

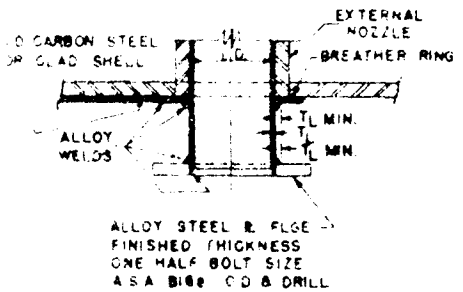

INTERNAL NOZZLE L.F.

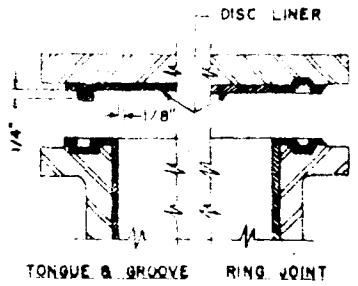

TONGUE & GROOVE RING JOINT

FLANGE & COVER FACING DETAILS

ALLOY WELD METAL BUILT UP & MACHINE FACED TO A MINIMUM THICKNESS OF 1/8"

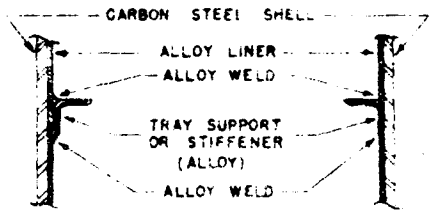

DETAIL "A" DETAIL "B"

NOTE:

TRAY SUPPORTS, STIFFENERS & ALL LOAD CARRYING MEMBERS FOR VESSELS WITH:

1) CLADDING & MACHINE ATTACHED LINER TO BE WELDED TO LINER AS SHOWN IN DETAIL "A"

2) STRIP WELDED OR PLUG WELDED LINERS TO BE WELDED TO CARBON STEEL AS SHOWN IN DETAIL "B"

GENERAL NOTES

(A) ALL CARBON STEEL WELDS IN SHELL OR HEAD SEAMS & NOZZLE ATTACHMENTS ARE TO BE COMPLETED PRIOR TO MAKING ANY ALLOY WELDS OR ATTACHMENT OF BREATHER RING.

(B) CLADDING TO BE CUT BACK MIN. OF 1/2" AT CARBON STEEL WELDS OF NOZZLES PRIOR TO MAKING CARBON STEEL WELDS FILL IN GAP WITH ALLOY WELD BEFORE ATTACHING BREATHER RING.

(C) ALL BREATHER RINGS SHALL BE APPROX 3" WIDE.

(D) LINER TO BE AIR TESTED TO A MIN. OF 20 P.S.I UNLESS OTHERWISE SPECIFIED

(E) FLANGE FACINGS SHALL BE AS PER A.S.A STD. B16e LATEST REVISION FOR TYPE OF FACING SEE VESSEL DRAWING

(F) "L" TO BE SHOWN AS PREFIX TO NOZZLE TYPE NO IN NOZZLE SCHEDULE ON VESSEL DRAWING INDICATES LINED NOZZLE.

(G) LINER ATTACHMENTS FOR NOZZLES 12" & OVER TO BE SIMILAR TO SHELL LINER ATTACHMENT

FOR ATTACHMENT OF NOZZLES SEE DRAWING CVS - 101

FOR NOZZLE TYPES SEE DRAWING CVS - 110

FOR PAD TYPE NOZZLES SEE DRAWING CVS - 108

NO.	SHEETS	ISSUE	REV	DESCRIPTION	DATE	CHKD	BC CH	J. FRIS	I. ERS	CH. DR.	DATE	CUST. APPR.
			2	ADDED X-RAY NOTE AT SHELL SEAMS	E.J.							
			1	APPROVED FOR CONSTRUCTION	H.W.	M.S.						

DRAWING STARTED 2-8-68

APPROVED ____ DATE ____

APPROVED ____ DATE ____

APPROVED ____ DATE ____

APPROVED ____ DATE ____

APPROVED ____ DATE ____

APPROVED ____ DATE ____

THE LUMMUS COMPANY
NEW YORK, N.Y.

LUMMUS CO'S JOB NO. ____ JOB NO. ____ CUSTOMER'S ORDER NO. ____

ALLOY LINER DETAILS

SCALE NONE | DWG. NO. CVS + 141 +2

ORGANIZACION DE LA SECCION VIII DIV. 1

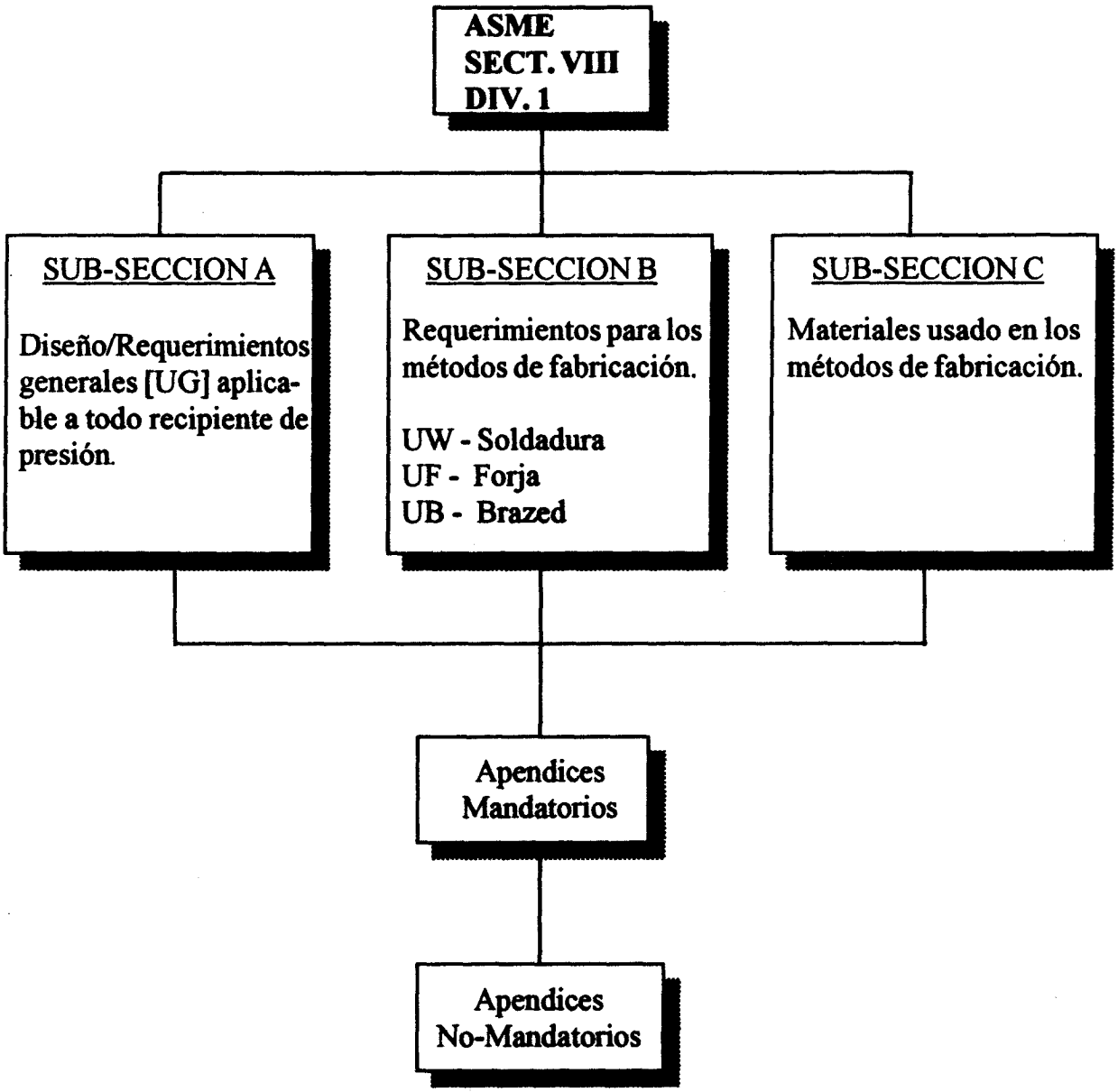

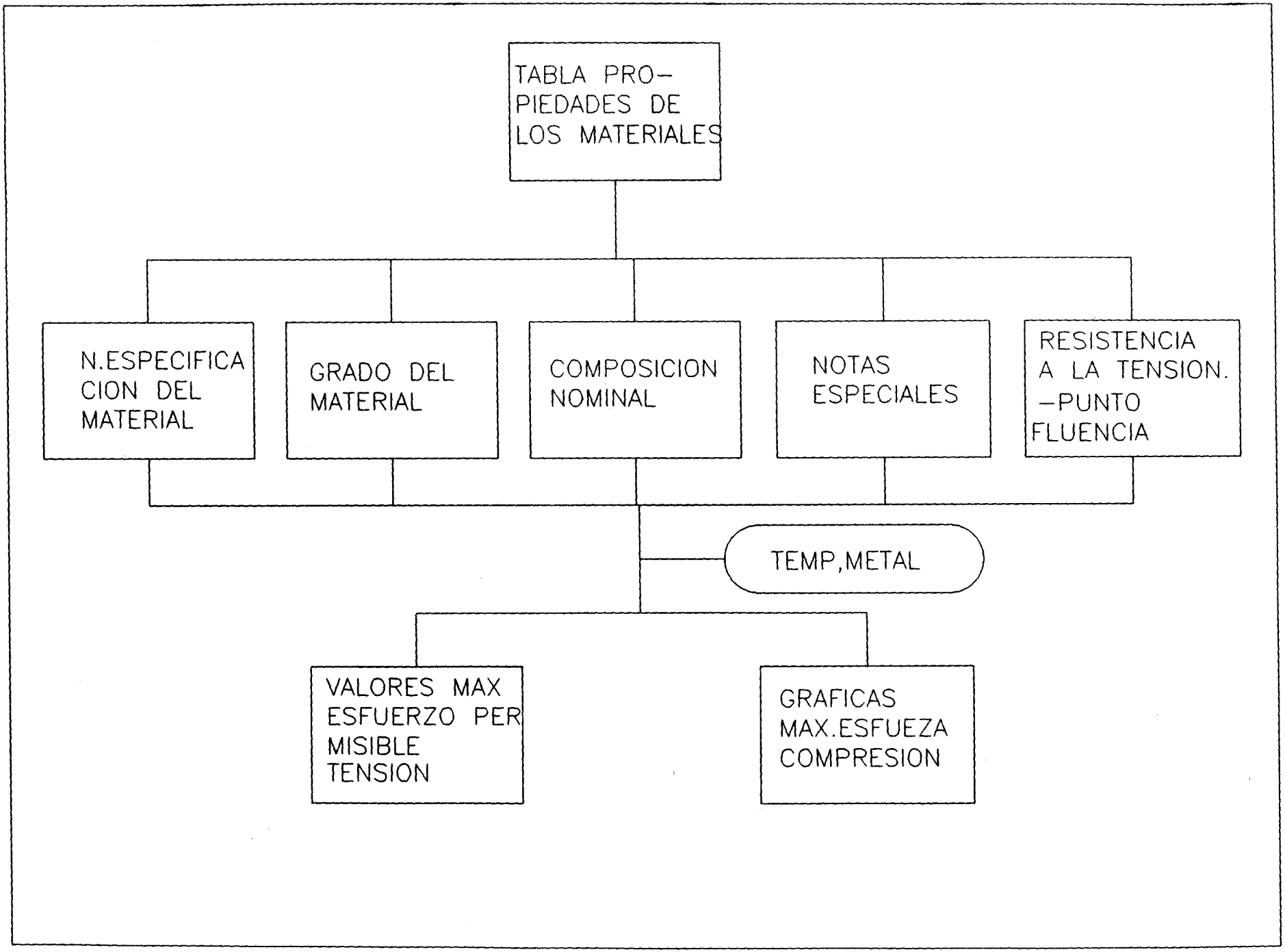
TABLA PRO-
PIEDADES DE
LOS MATERIALES
N.ESPECIFICA
CION DEL
MATERIAL
GRADO DEL
MATERIAL
COMPOSICION
NOMINAL
NOTAS
ESPECIALES
RESISTENCIA
A LA TENSION.
-PUNTO
FLUENCIA
TEMP,METAL
VALORES MAX
ESFUERZO PER
MISIBLE
TENSION
GRAFICAS
MAX.ESFUEZA
COMPRESION

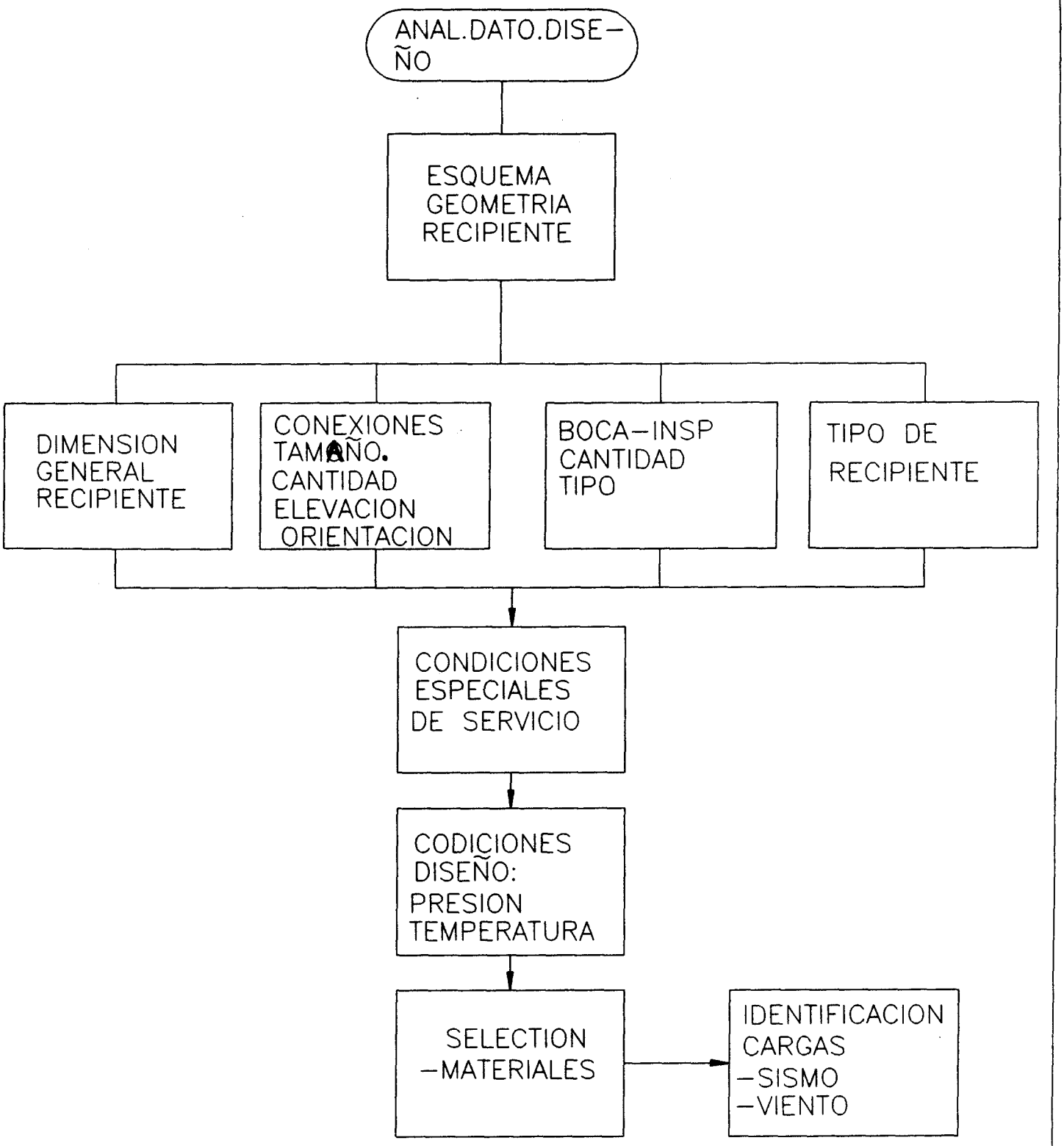
ANAL.DATO.DISE-
ÑO
ESQUEMA
GEOMETRIA
RECIPIENTE
DIMENSION
GENERAL
RECIPIENTE
CONEXIONES
TAMAÑO.
CANTIDAD
ELEVACION
ORIENTACION
BOCA-INSP
CANTIDAD
TIPO
TIPO DE
RECIPIENTE
CONDICIONES
ESPECIALES
DE SERVICIO
CODICIONES
DISEÑO:
PRESION
TEMPERATURA
SELECTION
-MATERIALES
IDENTIFICACION
CARGAS
-SISMO
-VIENTO

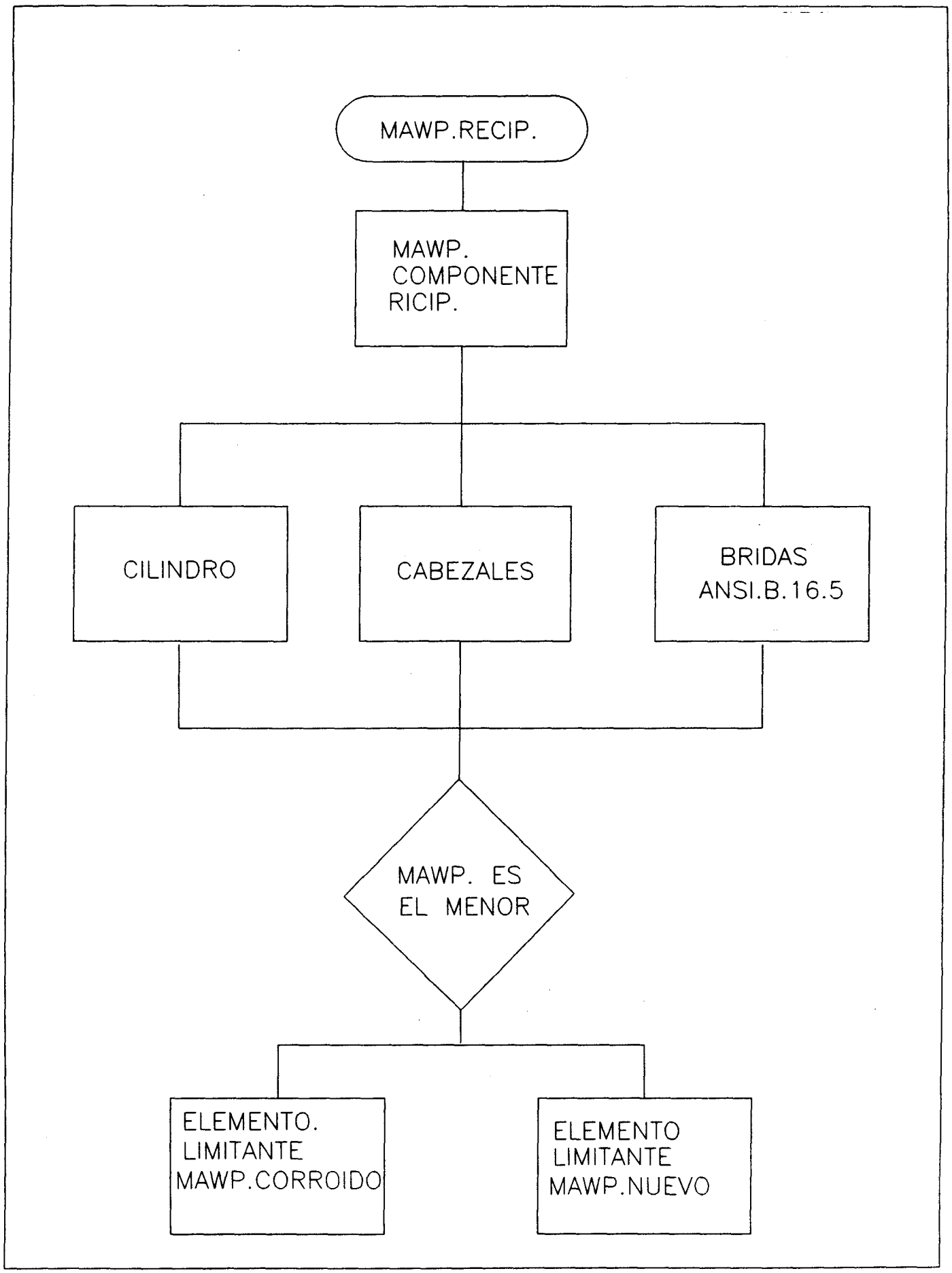
MAWP.RECIP.
MAWP. COMPONENTE RICIP.
CILINDRO
CABEZALES
BRIDAS ANSI.B.16.5
MAWP. ES EL MENOR
ELEMENTO. LIMITANTE MAWP.CORROIDO
ELEMENTO LIMITANTE MAWP.NUEVO

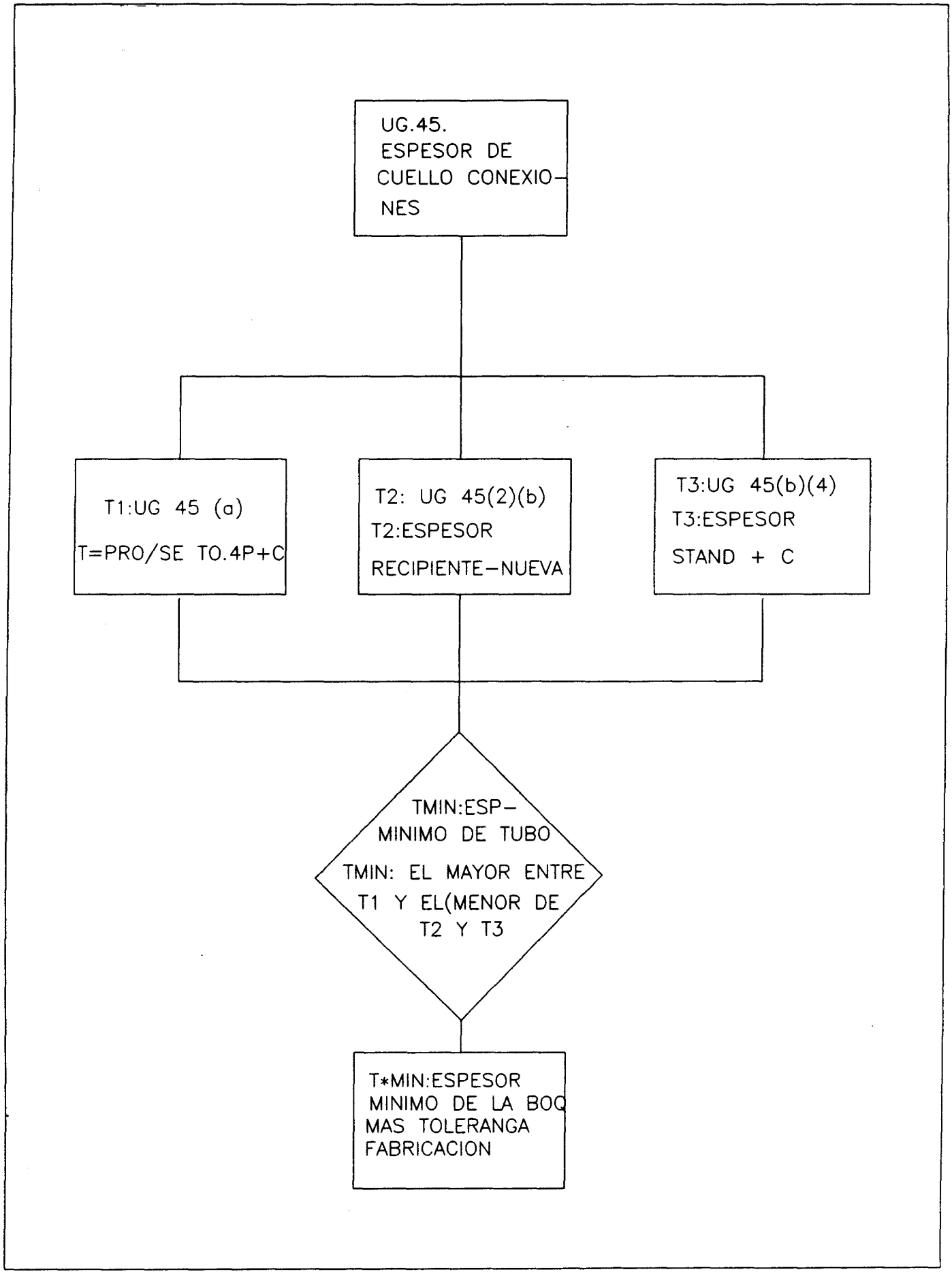
UG.45.
ESPESOR DE
CUELLO CONEXIO-
NES
T1:UG 45 (a)
T=PRO/SE TO.4P+C
T2: UG 45(2)(b)
T2:ESPESOR
RECIPIENTE-NUEVA
T3:UG 45(b)(4)
T3:ESPESOR
STAND + C
TMIN:ESP-
MINIMO DE TUBO
TMIN: EL MAYOR ENTRE
T1 Y EL(MENOR DE
T2 Y T3
T*MIN:ESPESOR
MINIMO DE LA BOQ
MAS TOLERANGA
FABRICACION

METODO DE COMPARACION DE AREAS. UG-37.REFUERZO REQUERIDO PARA ABERTURAS EN CARCAZA Y CABEZALES

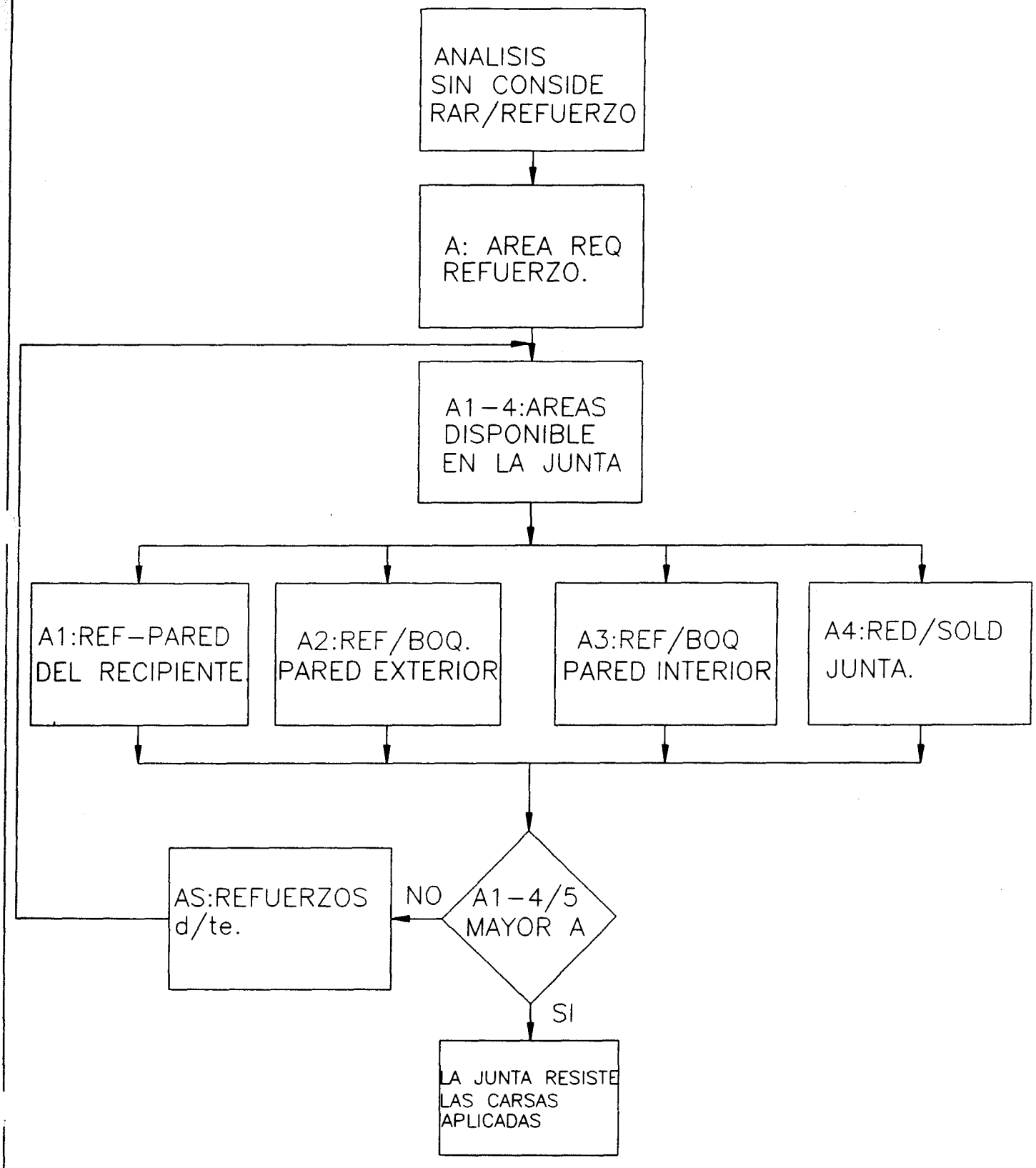

METODO DE COMPARACION DE ESFUERZO. A TRAVES DE LOS CAMINO CRITICOS DE LA JUNTAS SOLDADA UG.41

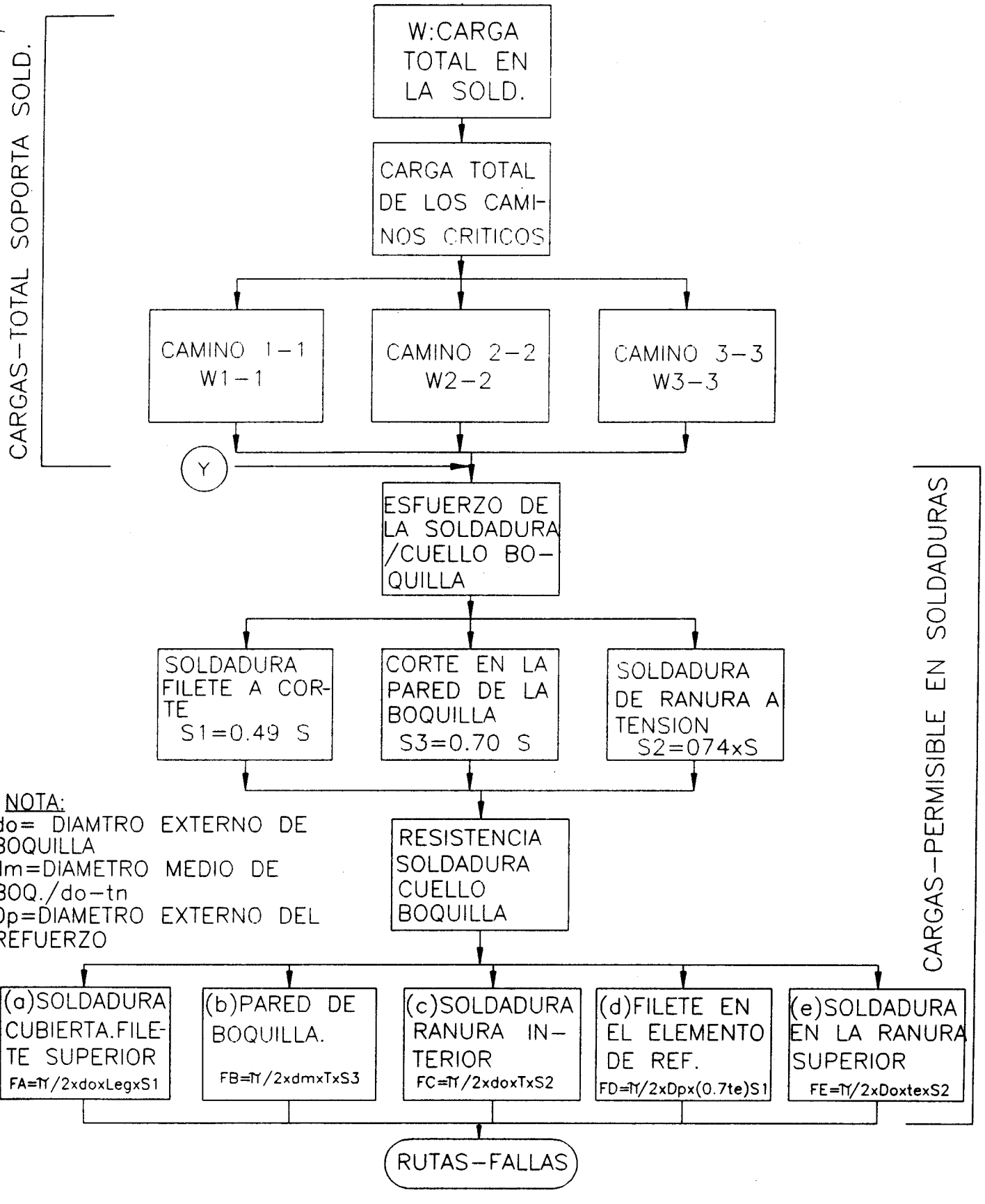

RUTAS FALLAS

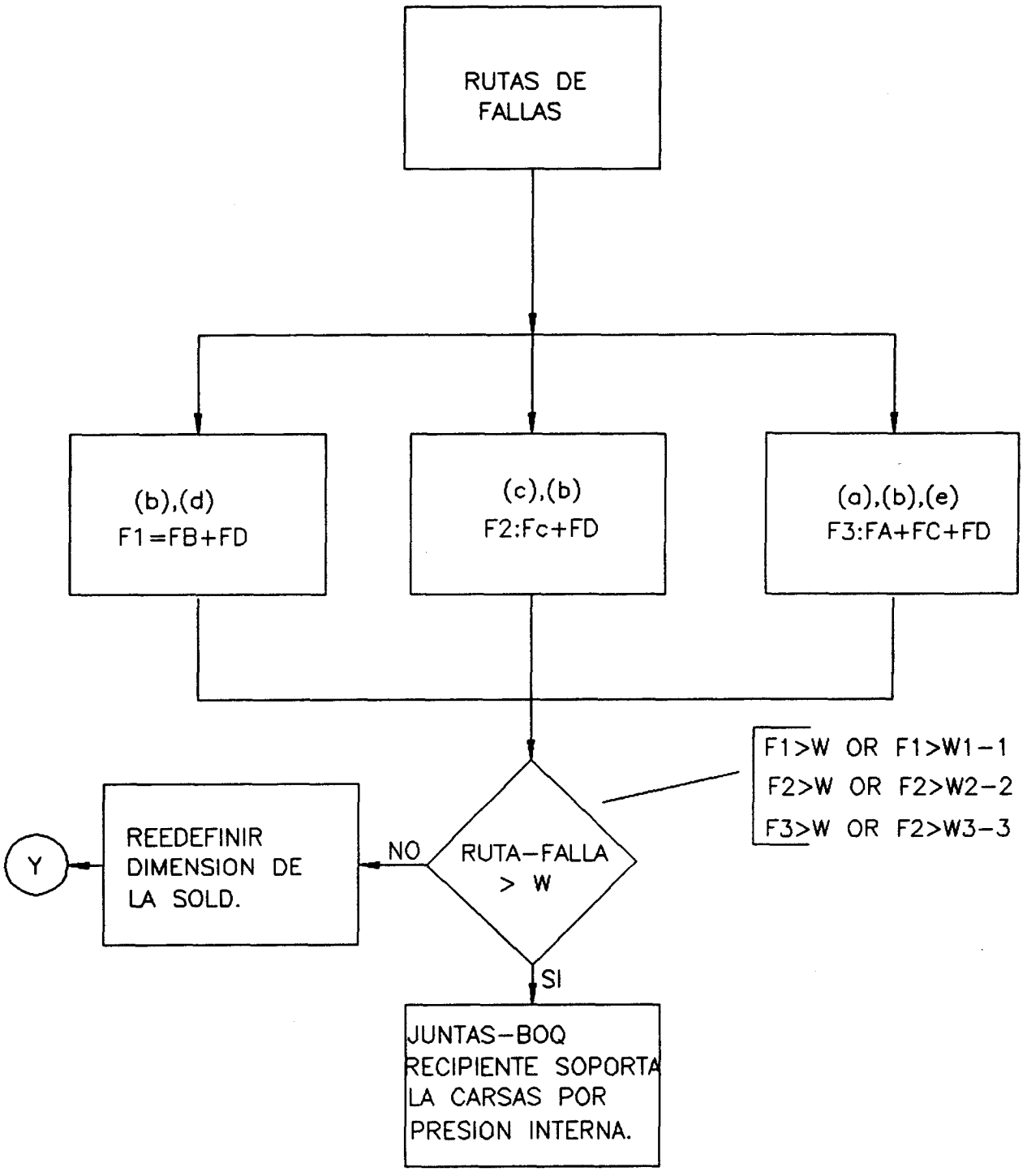

A2

ANALISIS DEL ESPESOR DE LA CARCAZA DEL RECIPIENTE BAJO PRESION EXTERNA.(REF:UG-28)

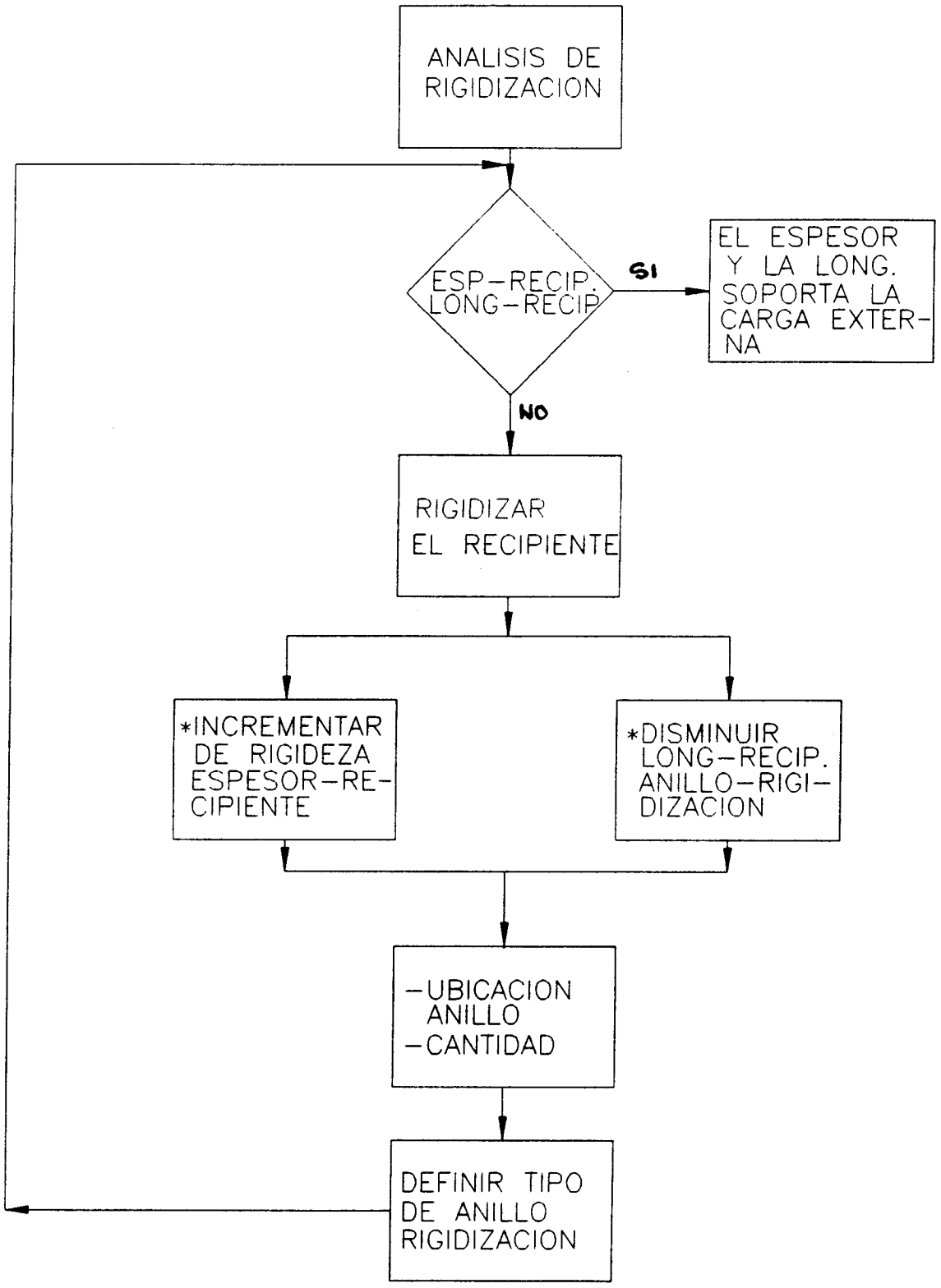

DISEÑO DE LOS ANILLOS RIGIDIZADORES.

REF.UG.29(f)

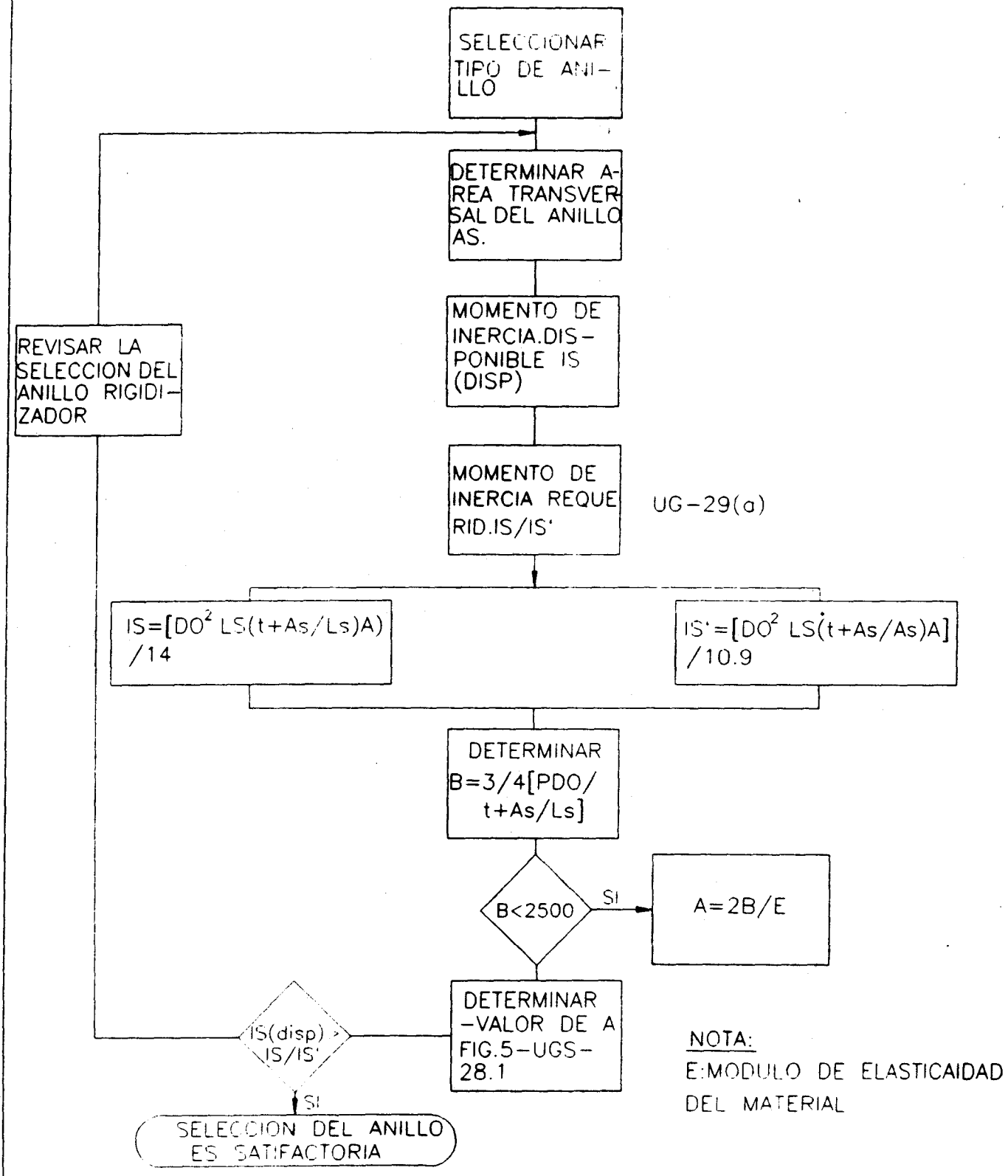

STIFFENING RING FOR EXTERNAL SHELL
UNDER EXTERNAL PRESSURE

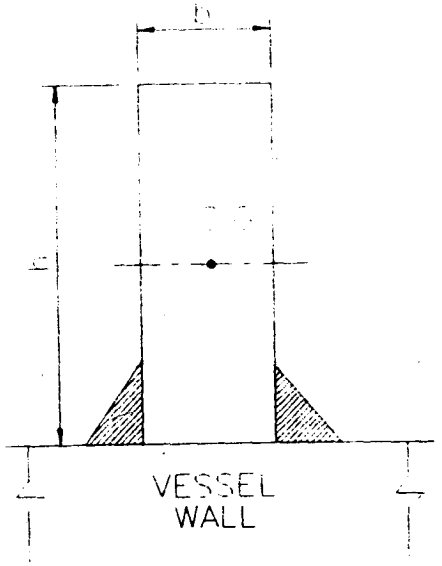

Momento de Inercia.

$Ix-x = bH^3/12$; $b = 1/4"$; $H = 3"$

$Ix-x = 0.5625\ IN^4$

$IS = [Do^2\ Ls(t+(As/Ls))A]/14$

EXTERNAL DIAMETER: $Do = 51.75"$

DESIGN LENGHT(Ls): $Ls = 76.5"$

MINIMUN REQUIRED THICK-SHELL: $t = 0.25"$

STIFFENING RING AREA(bxh) $As = 0.75\ IN^2$

$B = 3/4[PDO/(t+As/Ls)] = [15 \times 51.75/(0.25+(0.75/76.5))]0.75$

$B = 2241.$

Como el valor de B es MENOR. 2500

$A = 2B/E = 2 \times 2241/29 \times 10^6$

$A = 0.00015$

$IS = (51.75)^3 \times 76.5[0.25+(0.75/76.5)]0.00015$

$IS = 7.9\ IN^2$ / $IS > Ix-x$ / REVISAR DIMENSION DEL ANILLO RIGIDIZADOR / ANG(3" x 3" x 1/4"

FORM.10 A.

REFUERZO DE CONEXION

F = 1.0 ; FRL = FR2 = FR3 ; FR4 = 1.0

NUMERO DE OBRA	CLIENTE:	ITEM:
BOQUILLA	TAMAÑO DE TUBO	UBICACION

DATOS		SB	VALOR
PRESION DE DISEÑO		P	
TEMP. DE DISEÑO		T	
SN SV (MA .100)		fr1	
1 - FRI		F2	
ESFUERZO ADMISIBLE	BOQUILLA	SN	
	RECIPIENTE ESP= REFUERZO	SV	
EFIC. DE JUNTA (UG-40)		E1	
CORROSION ADMISIBLE		C	
ESP NOM.DE RECIPIENTE-C		T	
ESP.NOM.DE CUELLO.BOQ-C		TN	
RADIO INT DE BOQ +C		RN	
ESP R REFUERZO		TP	(3/8)(0.375")
ANCHO R REFUERZO		W	3"

CARGAS EXT.APLICADAS:
SERV.ESPECIAL[UG-120(d)]=

EXAMEN RADIOGRAFICO SI ☐ E=1 NO ☐ E=0.8

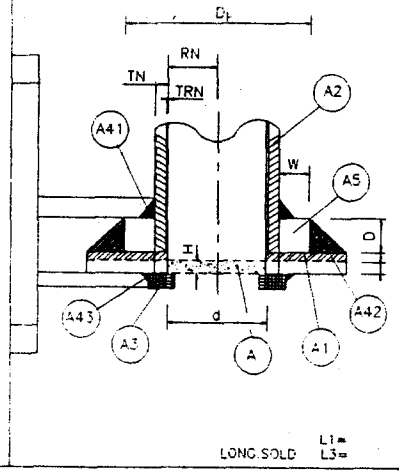

ESP REQ EN LA PARED DEL RECIPIENTE: [UG-27(c)(1)]

$$TR = \frac{PR}{SE-0.6P} = \_\_\_\_\_ =$$

ESPESOR REQ EN LA PARED DE LA BOQUILLA

$$TRN = \frac{PRN}{SN\ E-0.6\ P} = \_\_\_\_\_ =$$

AREA REQ DE REFUERZO

A=dtrf + 2TN Tr F(1-fr1) = 2.2 IN²

AREA DISPONIBLE COMO REFUERZO / CONSIDERANDO REFUERZO

PARED DE RECIPIENTE (VALOR MAYOR)

A1 { d(E1t-Ftr) - 2TN (E1T-FTr)(1-tr1) = 0.3663 IN²
2(TT TN)(E1T - Ftr)(1 - Fr1) - 2TN (E1T - FxTR(1-Fr1)
= 0.033 IN²

PROYECCION EXT.DE PARED DE BOQUILLA(VALOR MENOR)

A2 { 5T (TN-TRN) fr2T = 0.2463 IN²
5 (TN - TRN) (2R5TN + TR) fr2 = 0.9788

PROYECCION INTERNA DE PARED DE BOQUILLA(VALOR MENOR)

A3= 2 (TN)FR2h=

SLODADURAS CON REFUERZO:
A41,A42,A43
SIN REFUERZO
A41 = 0.0625 IN²
A42 = 0.140 IN²
A41,A43 VER FIG.UG-37.1

PLANCHA DE REFUERZO=

A5=(Dp-d-2TN)Tp ~~FR4~~ 1.0

A5 = 2 WTP = 2 x 3 x 0.375" = 2.25"

A TOTAL =A1 + A2 + A3 + A4 + A5

A total ref = 0.3663+0.9788+0+0.0625+0.14 +2.25 = 4.3 IN²

A total (RE) > A = 2.2 IN² Okey.

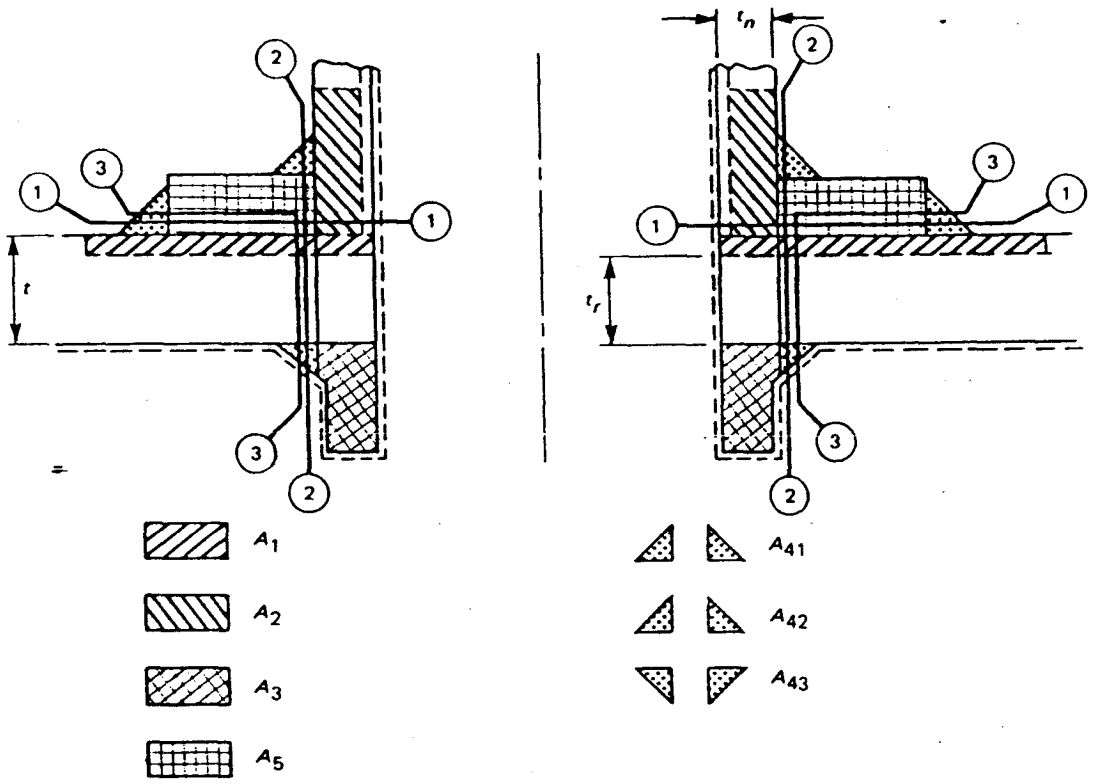

W = total weld load [UG-41 (b) (2)]
= $[A - (d + 2t_n)(E_1 t - F t_r)]\, S$

$W_{1\text{-}1}$ = weld load for strength path 1-1 [UG-41 (b) (1)]
= $(A_2 + A_5 + A_{41} + A_{42})\, S$

$W_{2\text{-}2}$ = weld load for strength path 2-2 [UG-41 (b) (1)]
= $(A_2 + A_3 + A_{41} + A_{43} + 2t_n t f_{r1})\, S$

$W_{3\text{-}3}$ = weld load for strength path 3-3 [UG-41 (b) (1)]
= $(A_2 + A_3 + A_5 + A_{41} + A_{42} + A_{43} + 2t_n t f_{r1})\, S$

GENERAL NOTES:
(a) A_1, A_2, A_3, A_5, and A_{4i} are modified by f_{rx} factors.
(b) Nomenclature is the same as in UG-37 and Fig. UG-37.1

(a) Depicts Typical Nozzle Detail With Neck Inserted Through the Vessel Wall

A86 FIG. UG-41.1 NOZZLE ATTACHMENT WELD LOADS AND WELD STRENGTH PATHS TO BE CONSIDERED

las cargas que soportan el filete de soldadura deben ser mayores que las cargas aplicadas

Apendice L-7

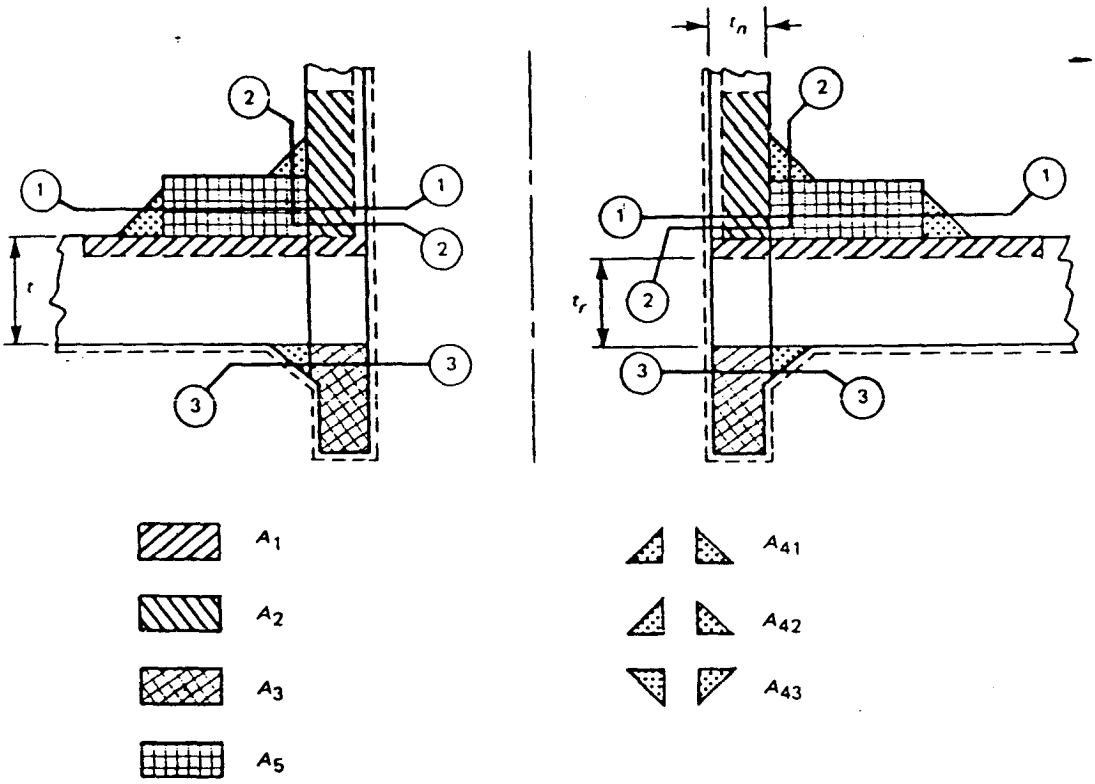

W = total weld load [UG-41 (b) (2)]
$= (A - A_1)\,S$

$W_{1\text{-}1}$ = weld load for strength path 1 – 1 [UG-41 (b) (1)]
$= (A_2 + A_5 + A_{41} + A_{42})\,S$

$W_{2\text{-}2}$ = weld load for strength path 2-2 [UG-41 (b) (1)]
$= (A_2 + A_{41})\,S$

$W_{3\text{-}3}$ = weld load for strength path 3-3 [UG-41 (b) (1)]
$= (A_3 + A_{43})\,S$

GENERAL NOTES:
(a) Areas A_1, A_2, A_3, A_5, and A_{4i} are modified by f_{rx} factors.
(b) Nomenclature is the same as in UG-37 and Fig. UG-37.1.

(b) Depicts Typical Nozzle Detail With Neck Abutting the Vessel Wall

A86 **FIG. UG-41.1 NOZZLE ATTACHMENT WELD LOADS AND WELD STRENGTH PATHS TO BE CONSIDERED (CONT'D)**

Table 2 Dimensions and Weights of Welded and Seamless Wrought Steel Pipe

Inch Units				Identification			SI Units			
Inch Nominal Size	Outside Diameter in.	Wall Thickness in.	Plain End Weight lb/ft	API Specs	Standard (STD) X-strong (X) XX-strong (XXS)	Schedule No.	Outside Diameter mm	Wall Thickness mm	Plain End Mass kg/m	Previous Status *
⅛	0.405	0.068	0.24	5L	STD	40	10.3	1.73	0.37	
⅛	0.405	0.095	0.31	5L	XS	80	10.3	2.41	0.47	
¼	0.540	0.088	0.42	5L	STD	40	13.7	2.24	0.63	
¼	0.540	0.119	0.54	5L	XS	80	13.7	3.02	0.80	
⅜	0.675	0.091	0.57	5L	STD	40	17.1	2.31	0.84	
⅜	0.675	0.126	0.74	5L	XS	80	17.1	3.20	1.10	
½	0.840	0.109	0.85	5L	STD	40	21.3	2.77	1.27	
½	0.840	0.147	1.09	5L	XS	80	21.3	3.73	1.62	
½	0.840	0.188	1.31			160	21.3	4.78	1.95	
½	0.840	0.294	1.71	5L	XXS		21.3	7.47	2.55	
¾	1.050	0.113	1.13	5L	STD	40	26.7	2.87	1.69	
¾	1.050	0.154	1.47	5L	XS	80	26.7	3.91	2.20	
¾	1.050	0.219	1.94			160	26.7	5.56	2.90	
¾	1.050	0.308	2.44	5L	XXS		26.7	7.82	3.64	
1	1.315	0.133	1.68	5L	STD	40	33.4	3.38	2.50	
1	1.315	0.179	2.17	5L	XS	80	33.4	4.55	3.24	
1	1.315	0.250	2.84			160	33.4	6.35	4.24	
1	1.315	0.358	3.66	5L	XXS		33.4	9.09	5.45	
1¼	1.660	0.140	2.27	5L	STD	40	42.2	3.56	3.39	
1¼	1.660	0.191	3.00	5L	XS	80	42.2	4.85	4.47	
1¼	1.660	0.250	3.76			160	42.2	6.35	5.61	
1¼	1.660	0.382	5.21	5L	XXS		42.2	9.70	7.77	
1½	1.900	0.145	2.72	5L	STD	40	48.3	3.68	4.05	
1½	1.900	0.200	3.63	5L	XS	80	48.3	5.08	5.41	
1½	1.900	0.281	4.86			160	48.3	7.14	7.25	
1½	1.900	0.400	6.41	5L	XXS		48.3	10.15	9.56	
2	2.375	0.083	2.03	5L 5LX			60.3	2.11	3.03	
2	2.375	0.109	2.64	5L 5LX			60.3	2.77	3.93	
2	2.375	0.125	3.00	5L 5LX			60.3	3.18	4.48	
2	2.375	0.141	3.36	5L 5LX			60.3	3.58	5.01	
2	2.375	0.154	3.65	5L 5LX	STD	40	60.3	3.91	5.44	
2	2.375	0.172	4.05	5L 5LX			60.3	4.37	6.03	
2	2.375	0.188	4.39	5L 5LX			60.3	4.78	6.54	
2	2.375	0.218	5.02	5L 5LX	XS	80	60.3	5.54	7.48	
2	2.375	0.250	5.67	5L 5LX			60.3	6.35	8.45	
2	2.375	0.281	6.28	5L 5LX			60.3	7.14	9.36	
2	2.375	0.344	7.46			160	60.3	8.74	11.11	C
2	2.375	0.436	9.03	5L 5LX	XXS		60.3	11.07	13.44	

*N—Item not shown in ANSI B36.10-1975 which has been added to API Specifications.
C—Corrected listing for an item that was incorrectly listed in ANSI B36.10-1975.
No Code Letter—Item correctly listed in ANSI B36.10-1975.

Table 2 Dimensions and Weights of Welded and Seamless Wrought Steel Pipe (Continued)

Inch Units				Identification			SI Units			
Inch Nominal Size	Outside Diameter in.	Wall Thickness in.	Plain End Weight lb/ft	API Specs	Standard (STD) X-strong (X) XX-strong (XXS)	Schedule No.	Outside Diameter mm	Wall Thickness mm	Plain End Mass kg/m	Previous Status *
2½	2.875	0.083	2.47	5L 5LX			73.0	2.11	3.69	
2½	2.875	0.109	3.22	5L 5LX			73.0	2.77	4.80	
2½	2.875	0.125	3.67	5L 5LX			73.0	3.18	5.48	
2½	2.875	0.141	4.12	5L 5LX			73.0	3.58	6.13	
2½	2.875	0.156	4.53	5L 5LX			73.0	3.96	6.74	
2½	2.875	0.172	4.97	5L 5LX			73.0	4.37	7.40	
2½	2.875	0.188	5.40	5L 5LX			73.0	4.78	8.04	
2½	2.875	0.203	5.79	5L 5LX	STD	40	73.0	5.16	8.63	
2½	2.875	0.216	6.13	5L 5LX			73.0	5.49	9.14	
2½	2.875	0.250	7.01	5L 5LX			73.0	6.35	10.44	
2½	2.875	0.276	7.66	5L 5LX	XS	80	73.0	7.01	11.41	
2½	2.875	0.375	10.01			160	73.0	9.53	14.92	
2½	2.875	0.552	13.69	5L 5LX	XXS		73.0	14.02	20.39	
3	3.500	0.083	3.03	5L 5LX			88.9	2.11	4.52	
3	3.500	0.109	3.95	5L 5LX			88.9	2.77	5.88	
3	3.500	0.125	4.51	5L 5LX			88.9	3.18	6.72	
3	3.500	0.141	5.06	5L 5LX			88.9	3.58	7.53	
3	3.500	0.156	5.57	5L 5LX			88.9	3.96	8.29	
3	3.500	0.172	6.11	5L 5LX			88.9	4.37	9.11	
3	3.500	0.188	6.65	5L 5LX			88.9	4.78	9.92	
3	3.500	0.216	7.58	5L 5LX	STD	40	88.9	5.49	11.29	
3	3.500	0.250	8.68	5L 5LX			88.9	6.35	12.93	
3	3.500	0.281	9.66	5L 5LX			88.9	7.14	14.40	
3	3.500	0.300	10.25	5L 5LX	XS	80	88.9	7.62	15.27	
3	3.500	0.438	14.32			160	88.9	11.13	21.35	
3	3.500	0.600	18.58	5L 5LX	XXS		88.9	15.24	27.68	
3½	4.000	0.083	3.47	5L 5LX			101.6	2.11	5.18	
3½	4.000	0.109	4.53	5L 5LX			101.6	2.77	6.75	
3½	4.000	0.125	5.17	5L 5LX			101.6	3.18	7.72	
3½	4.000	0.141	5.81	5L 5LX			101.6	3.58	8.65	
3½	4.000	0.156	6.40	5L 5LX			101.6	3.96	9.53	
3½	4.000	0.172	7.03	5L 5LX			101.6	4.37	10.48	
3½	4.000	0.188	7.65	5L 5LX			101.6	4.78	11.41	
3½	4.000	0.226	9.11	5L 5LX	STD	40	101.6	5.74	13.57	
3½	4.000	0.250	10.01	5L 5LX			101.6	6.35	14.92	
3½	4.000	0.281	11.16	5L 5LX			101.6	7.14	16.63	
3½	4.000	0.318	12.50	5L 5LX	XS	80	101.6	8.08	18.63	
4	4.500	0.083	3.92	5L 5LX 5LS			114.3	2.11	5.84	
4	4.500	0.109	5.11	5L 5LS			114.3	2.77	7.62	
4	4.500	0.125	5.84	5L 5LX 5LS			114.3	3.18	8.71	
4	4.500	0.141	6.56	5L 5LX 5LS			114.3	3.58	9.77	
4	4.500	0.156	7.24	5L 5LX 5LS			114.3	3.96	10.78	
4	4.500	0.172	7.95	5L 5LX 5LS			114.3	4.37	11.85	
4	4.500	0.188	8.66	5L 5LX 5LS			114.3	4.78	12.91	
4	4.500	0.203	9.32	5L 5LX 5LS			114.3	5.16	13.89	
4	4.500	0.219	10.01	5L 5LX 5LS			114.3	5.56	14.91	
4	4.500	0.237	10.79	5L 5LX 5LS	STD	40	114.3	6.02	16.07	

Table 2 Dimensions and Weights of Welded and Seamless Wrought Steel Pipe (Continued)

Inch Units				Identification			SI Units			
Inch Nominal Size	Outside Diameter in.	Wall Thickness in.	Plain End Weight lb/ft	API Specs	Standard (STD) X-strong (X) XX-strong (XXS)	Schedule No.	Outside Diameter mm	Wall Thickness mm	Plain End Mass kg/m	Previous Status *
8	8.625	0.312	27.70	5L 5LX 5LS			219.1	7.92	41.24	
8	8.625	0.322	28.55	5L 5LX 5LS	STD	40	219.1	8.18	42.55	
8	8.625	0.344	30.42	5L 5LX 5LS			219.1	8.74	45.34	
8	8.625	0.375	33.04	5L 5LX 5LS			219.1	9.53	49.25	
8	8.625	0.406	35.64			60	219.1	10.31	53.08	
8	8.625	0.438	38.30	5L 5LX 5LS			219.1	11.13	57.08	
8	8.625	0.500	43.39	5L 5LX 5LS	XS	80	219.1	12.70	64.64	
8	8.625	0.562	48.40	5L 5LX 5LS			219.1	14.27	72.08	
8	8.625	0.594	50.95			100	219.1	15.09	75.92	
8	8.625	0.625	53.40	5L 5LX 5LS			219.1	15.88	79.58	
8	8.625	0.719	60.71	5L 5LX 5LS		120	219.1	18.26	90.44	
8	8.625	0.812	67.76			140	219.1	20.62	100.92	
8	8.625	0.875	72.42	5L	XXS		219.1	22.23	107.92	
8	8.625	0.906	74.69			160	219.1	23.01	111.27	
10	10.750	0.156	17.65	5L 5LX 5LS			273.1	3.96	26.28	
10	10.750	0.188	21.21	5L 5LX 5LS			273.1	4.78	31.63	
10	10.750	0.203	22.87	5LX 5LS			273.1	5.16	34.09	
10	10.750	0.219	24.63	5L 5LX 5LS			273.1	5.56	36.68	
10	10.750	0.250	28.04	5L 5LX 5LS		20	273.1	6.35	41.77	
10	10.750	0.279	31.20	5L 5LX5LS			273.1	7.09	46.51	
10	10.750	0.307	34.24	5L 5LX 5LS		30	273.1	7.80	51.03	
10	10.750	0.344	38.23	5L 5LX 5LS			273.1	8.74	56.98	
10	10.750	0.365	40.48	5L 5LX 5LS	STD	40	273.1	9.27	60.31	
10	10.750	0.438	48.24	5L 5LX 5LS			273.1	11.13	71.90	
10	10.750	0.500	54.74	5L 5LX 5LS	XS	60	273.1	12.70	81.55	
10	10.750	0.562	61.15	5L 5LX 5LS			273.1	14.27	91.08	
10	10.750	0.594	64.43			80	273.1	15.09	96.01	
10	10.750	0.625	67.58	5L 5LX 5LS			273.1	15.88	100.73	
10	10.750	0.719	77.03	5L 5LX 5LS		100	273.1	18.26	114.75	
10	10.750	0.812	86.18	5L 5LS			273.1	20.62	128.38	
10	10.750	0.844	89.29			120	273.1	21.44	133.06	
10	10.750	1.000	104.13		XXS	140	273.1	25.40	155.15	
10	10.750	1.125	115.64			160	273.1	28.58	172.33	
12	12.750	0.172	23.11	5L 5LX 5LS			323.9	4.37	34.43	
12	12.750	0.188	25.22	5L 5LX 5LS			323.9	4.78	37.62	
12	12.750	0.203	27.20	5LX 5LS			323.9	5.16	40.56	
12	12.750	0.219	29.31	5L 5LX 5LS			323.9	5.56	43.65	
12	12.750	0.250	33.38	5L 5LX 5LS		20	323.9	6.35	49.73	
12	12.750	0.281	37.42	5L 5LX 5LS			323.9	7.14	55.77	
12	12.750	0.312	41.45	5L 5LX 5LS			323.9	7.92	61.71	
12	12.750	0.330	43.77	5L 5LX 5LS		30	323.9	8.38	65.20	
12	12.750	0.344	45.58	5L 5LX 5LS			323.9	8.74	67.93	
12	12.750	0.375	49.56	5L 5LX 5LS	STD		323.9	9.53	73.88	
12	12.750	0.406	53.52	5LX 5LS		40	323.9	10.31	79.73	
12	12.750	0.438	57.59	5L 5LX 5LS			323.9	11.13	85.84	
12	12.750	0.500	65.42	5L 5LX 5LS	XS		323.9	12.70	97.46	
12	12.750	0.562	73.15	5L 5LX 5LS		60	323.9	14.27	108.96	
12	12.750	0.625	80.93	5L 5LX 5LS			323.9	15.88	120.62	

UG-32 W - Cabezal Toriesferico

INTRODUCCION del curso
organizacion de la seccion VIII
Alcance de la seccion VIII DIV. 1

ORGANIZACION DE LA DIVISION 1

ASME SECT VIII DIV 1

Sub-Seccion A) Sub-Seccion B Sub seccion C

Diseño/Requerimientos generales

Eficiencia de soldadura es funcion del servicio
Tabla 1
Categorias de las soldaduras
Categoria Descripcion Tabla UW-12
A Sold. Long.
Corrosion UCS-25

Para servicios de Agua aire y ~~no corrosivo~~
la corrosion sera la sexta parte del espesor del Shell calculado.
1/16" equivale a 12 años de proteccion de la corrosion
- Carga de diseño UG-20
- Seleccion de materiales ASME SECCION II

copia.

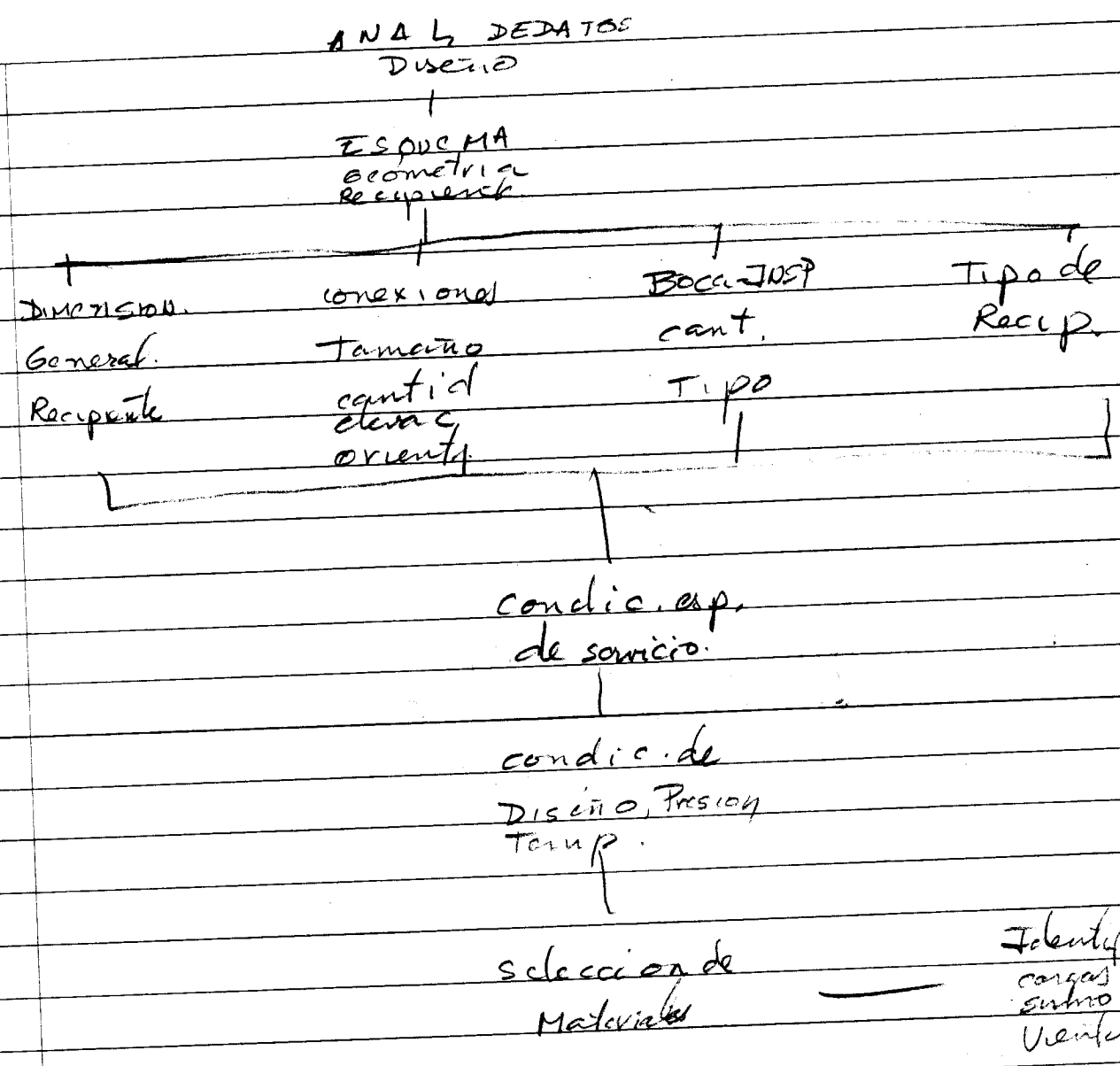

U6-27 Espesor de carcasa bajo presion interna.

1-4 Formula para el diseño de cabezales bajo presion interna Apendice 1 pag 466

A

UG-32(J) El radio largo no debe ser mas grande que el diametro exterior del cabezal. Y el radio corto no debe ser menor que el 6% del diametro exterior del cabezal. Pero en ningun caso el radio corto debe ser menor a 3 veces el espesor del cabezal. En otras palabras

MAX L = 0.D (D. ext del cabezal
MIN r = 6% OD pero no menor a 3 veces el espesor del cabezal.

$$L = \frac{H^2 + R^2 - 2Rr}{2(H-r)}$$

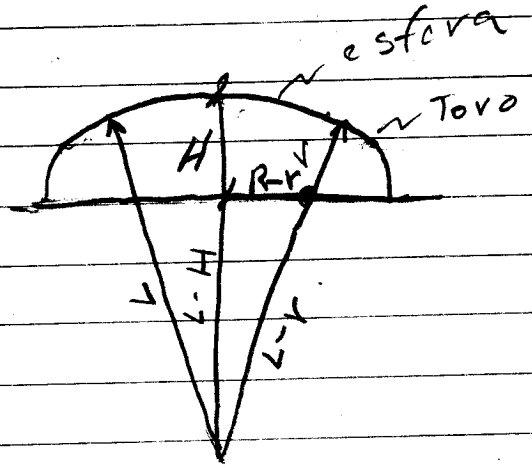

PAG 469

UG-32(g) cabezal conico: El espesor requerido de un cabezal conico o casco conico que tienen un angulo no mas grande de 30°

$$T = \frac{PD}{2\cos\alpha(SE - 0.6P)} \qquad P = \frac{2SE\,t\cos\alpha}{D + 1.2t\cos\alpha}$$

UG-98 Req.
MAW

Presion Maxima Permisible de Trabajo (MAWP)
En la mayoria de los casos el espesor requerido en los cabezales y carcasa de un recipiente resulta menor que el espesor utilizado en la construccion del recipiente.

Este espesor adicional permite incrementar la capacidad del recipiente por efecto de presion. Denominandose este valor como presion maxima permisible de trabajo (MAWP)

UG-98 Maxima presion permisible de Trabajo
a) La maxima presion de trabajo permisible para un recipiente es la max presion en el tope del recipiente en su posicion de operacion normal a la temp. de operacion especificada para esa presion. El MAWP es el menor valor encontrado para algunas partes esenciales del recipiente. El

se calcula el MAW del cilindro, cabezal y Bridas. y se toma el menor; para el MAW del equipo se puede calcular en la condicion nueva como la corroida

Calculo del espesor de las Boquillas

